THIS DRAWING IS UNPUBLISHED. RELEASED FOR PUBLICATION -,- .
© COPYRIGHT - By TYCO ELECTRONICS CORPORATION ALL RIGHTS RESERVED.

LOC	DIST
AF	50

REVISIONS

P	LTR	DESCRIPTION	DATE	DWN	APVD
	D	REVISE PER ECR-13-013738	15FEB2014	GRZ	JL

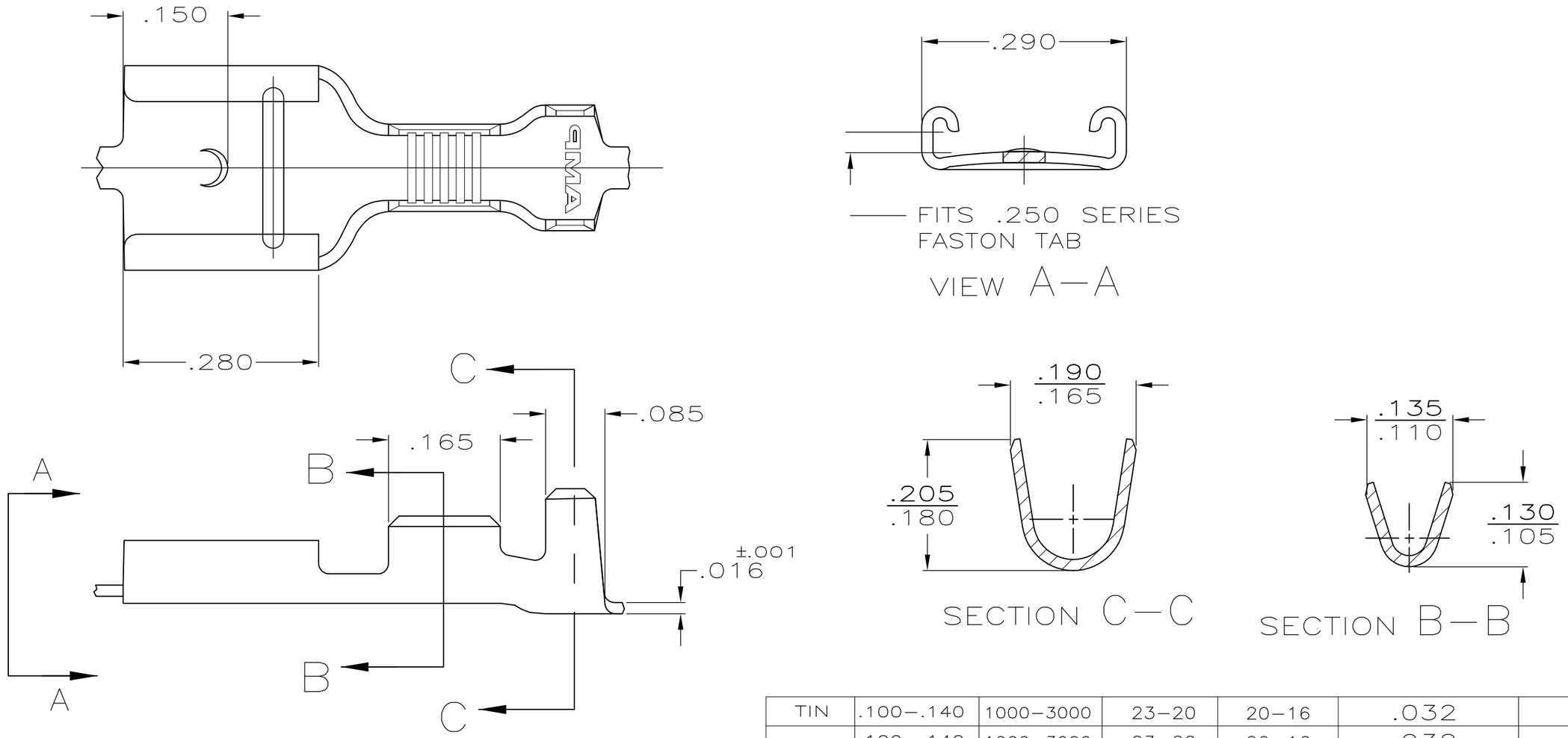

FINISH	INSULATION RANGE	WIRE SIZE CMA	23-20 2 MAGNET	20-16 1 MAGNET	MATING TAB THK ±.001	PART NUMBER
TIN	.100-.140	1000-3000	23-20	20-16	.032	60384-2
-	.100-.140	1000-3000	23-20	20-16	.032	60384-1

THIS DRAWING IS A CONTROLLED DOCUMENT.

DIMENSIONS: INCHES

TOLERANCES UNLESS OTHERWISE SPECIFIED:

0 PLC	± -
1 PLC	± -
2 PLC	± -
3 PLC	± .015
4 PLC	± -
ANGLES	± -

MATERIAL: BRASS

FINISH: SEE TABLE

DWN JR RUTH 5/18/90
CHK MS FEHER 5/18/90
APVD — 5/18/90 C MEYERS
PRODUCT SPEC — 5/18/90 R KUZO
APPLICATION SPEC —
WEIGHT —

CUSTOMER DRAWING

TE Connectivity

NAME: RECEPTACLE, FASTON, AMPLIVAR, .250 SERIES

SIZE	CAGE CODE	DRAWING NO	RESTRICTED TO
A3	00779	C-60384	—

SCALE 6:1 SHEET 1 OF 1 REV D

1470-19 (3/11)