THIS DRAWING IS UNPUBLISHED. RELEASED FOR PUBLICATION – –, .
© COPYRIGHT – By – ALL RIGHTS RESERVED.

LOC	DIST
AF	50

REVISIONS

P	LTR	DESCRIPTION	DATE	DWN	APVD
	Y	REVISED PER ECR–12–013459	28NOV2012	KH	PD

1 CONTINUOUS STRIP ON REELS.

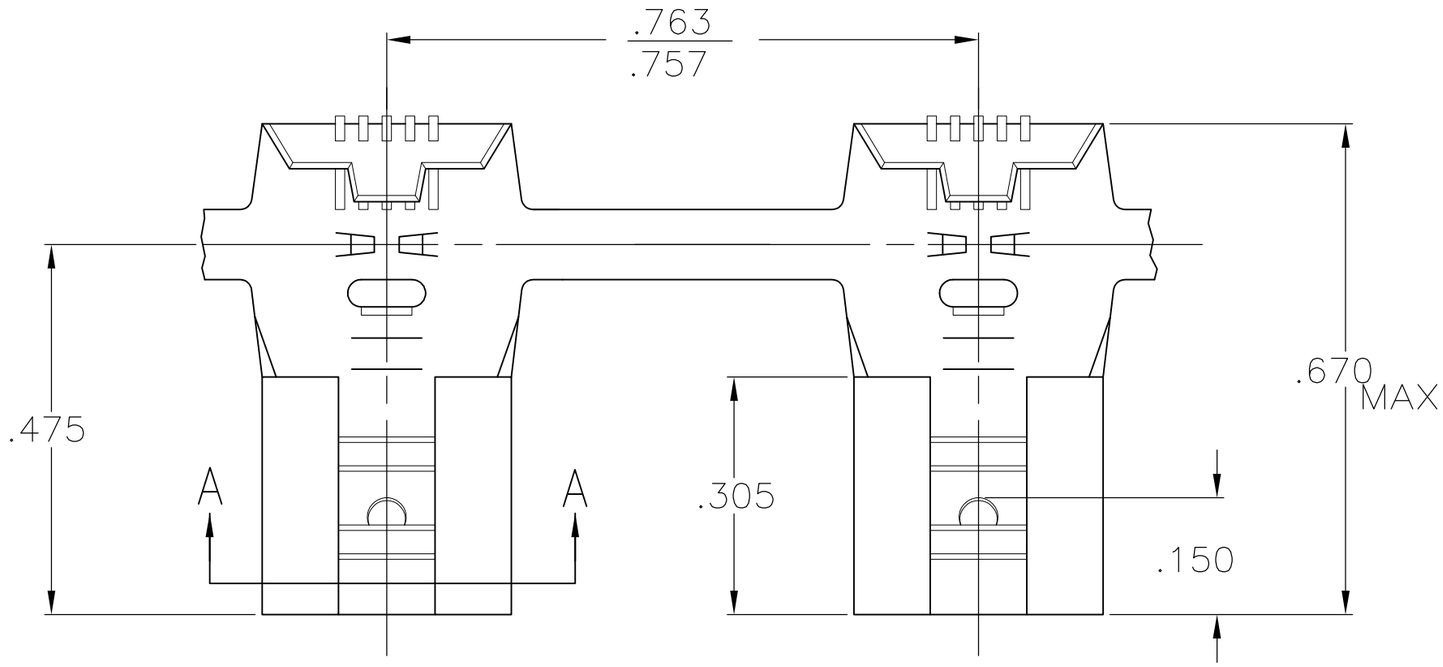

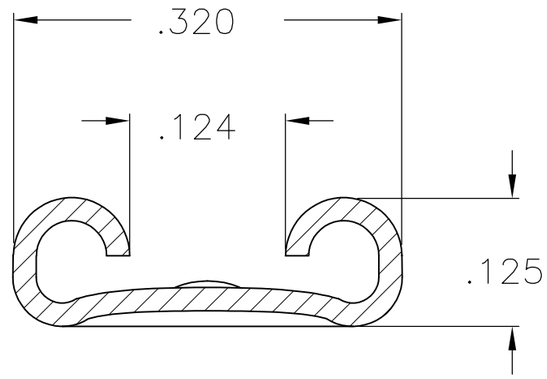

SECTION A–A

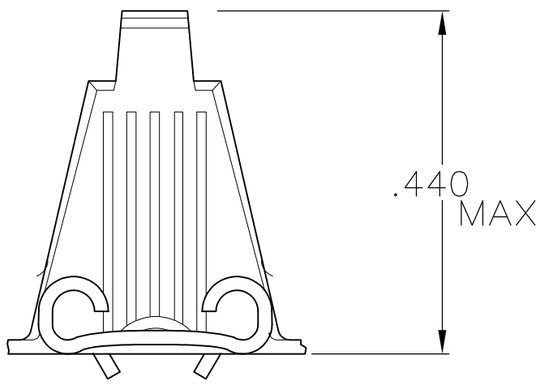

	REEELING	WIRE SIZE	TAB THK	FINISH	MATERIAL	PART NO.
	REV. REEL L.H.	12–10	.032 ±.001	TIN	.018 PHOS. BRONZE	62057–8
	REV. REEL L.H.	12–10	.032 ±.001	SILVER	.018 PHOS. BRONZE	62057–7
OBSOLETE	~~REV. REEL L.H.~~	~~12–10~~	~~.032 ±.001~~		~~.018 BRASS~~	~~62057–6~~
		12–10	.032 ±.001	TIN	.018 PHOS. BRONZE	62057–5
	REV. REEL L.H.	12–10	.032 ±.001	TIN	BRASS	62057–4
		12–10	.032 ±.001	TIN	BRASS	62057–3
		12–10	.032 ±.001	SILVER	.018 PHOS. BRONZE	62057–1

THIS DRAWING IS A CONTROLLED DOCUMENT.

DIMENSIONS: INCHES

TOLERANCES UNLESS OTHERWISE SPECIFIED:

0 PLC	± –
1 PLC	± –
2 PLC	± –
3 PLC	± .015
4 PLC	± –
ANGLES	± –

MATERIAL: SEE TABLE

FINISH: SEE TABLE

DWN JR RUTH 2/3/86
CHK R KUZO 2/7/86
APVD C MEYERS 2/7/86
PRODUCT SPEC —
APPLICATION SPEC —
WEIGHT —

TE Connectivity

NAME: .250 SERIES FLAG FASTON RECEPTACLE

SIZE	CAGE CODE	DRAWING NO	RESTRICTED TO
A3	00779	C–62057	—

CUSTOMER DRAWING

SCALE	SHEET	REV
1:1	1 OF 1	Y