THIS DRAWING IS UNPUBLISHED. RELEASED FOR PUBLICATION -,- .
© COPYRIGHT - By - ALL RIGHTS RESERVED.

REVISIONS

P	LTR	DESCRIPTION	DATE	DWN	APVD
	F5	REVISED PER ECR-17-000959	24FEB2017	RS	DR

AMP
WIRE RANGE

2 AWG
SOLID OR STRANDED

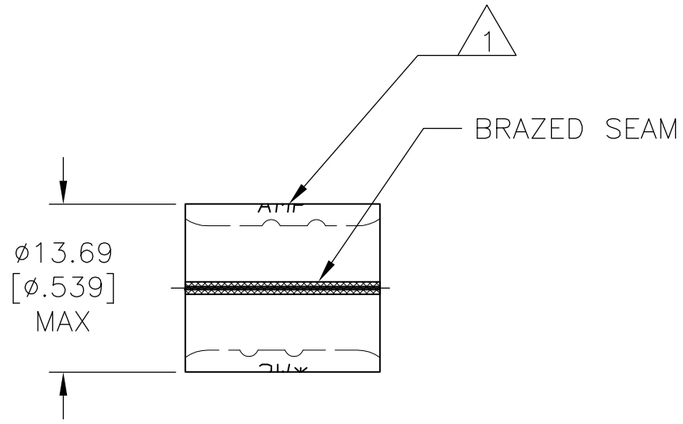

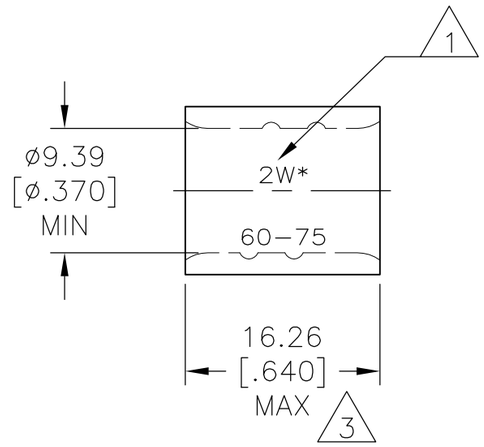

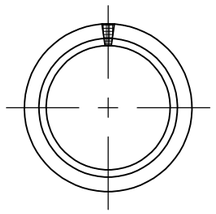

1. STAMP AMP 2W* 60-75 APPROX AS SHOWN.
2. MATERIAL THK: $1.78^{\pm 0.08}$ [$.070^{\pm .003}$].
3. MAX LENGTH DOES NOT INCLUDE MANUFACTURING TABS.
4. TIN PLATE 0.00254 [.000100] MIN. EXT. THK. PER ASTM B545.
5. TIN/LEAD (60/40) PLATE, 0.00254 [.000100] MIN. EXT. THK. PER SAE-AMS-P-81728.
6. UL LISTED E13288, 2 AWG STRANDED.
7. NOTE DELETED.
8. CSA CERTIFIED LR7189, 2 AWG SOLID OR STRANDED.
9. NICKEL PLATE 0.00762[.000300] MIN. EXT. THK. PER SAE AMS QQ-N-290.

	MAX. OPERATING TEMPERATURE	QTY.	PACKAGE TYPE	APPROVALS	FINISH	PART NO.
PRELIMINARY	170°C [338°F]	25	LOOSE PIECE	6 8	4	8-35187-3
	343°C [650°F]	50		---	9	35187-3
	170°C [338°F]	50		---	5	35187-1
		50		6 8	4	35187

AMP INCORPORATED
CUSTOMER SERVICE SYSTEMS

FOR ADDITIONAL PRODUCT INFORMATION OR COPIES OF DRAWINGS AND TECHNICAL DOCUMENTS	PRODUCT INFORMATION CENTER 1-800-522-6752
FOR APPLICATION TOOLING INFORMATION	TOOLING ASSISTANCE CENTER 1-800-722-1111
FOR ORDER ENTRY	1-800-526-5142

THIS DRAWING IS A CONTROLLED DOCUMENT FOR AMP INCORPORATED. IT IS SUBJECT TO CHANGE AND THE CONTROLLING ENGINEERING ORGANIZATION SHOULD BE CONTACTED FOR THE LATEST REVISION.

MAX RECOMMENDED OPERATING TEMPERATURE: SEE TABLE

VOLTAGE RATING: N/A

CIRCULAR MIL AREA: 26.7-42.4mm² [52,600-83,700] SOLID OR STRANDED

THIS DRAWING IS A CONTROLLED DOCUMENT.

DIMENSIONS: mm [INCHES]

TOLERANCES UNLESS OTHERWISE SPECIFIED:
0 PLC ± -
1 PLC ± -
2 PLC ± 0.20[.008]
3 PLC ± -
4 PLC ± -
ANGLES ± -

MATERIAL: COPPER ASTM B-152

FINISH: SEE TABLE

DWN	DK SCHRUM	8/28/92
CHK	DA PATTERSON	9/8/92
APVD	DA PATTERSON	9/8/92
PRODUCT SPEC	—	
APPLICATION SPEC	—	
WEIGHT	—	

TE Connectivity

NAME: SPLICE, PARALLEL, SOLISTRAND

SIZE	CAGE CODE	DRAWING NO	RESTRICTED TO
A3	00779	C-35187	—

CUSTOMER DRAWING | SCALE 2:1 | SHEET 1 OF 1 | REV F5

1470-19 (1/15)