THIS DRAWING IS UNPUBLISHED. RELEASED FOR PUBLICATION -,- .
© COPYRIGHT - BY TYCO ELECTRONICS CORPORATION. ALL RIGHTS RESERVED.

LOC	DIST
G	14

REVISIONS

P	LTR	DESCRIPTION	DATE	DWN	APVD
	D1	REDRAWN PER ECR 09-016745	24JUL09	JR	TM

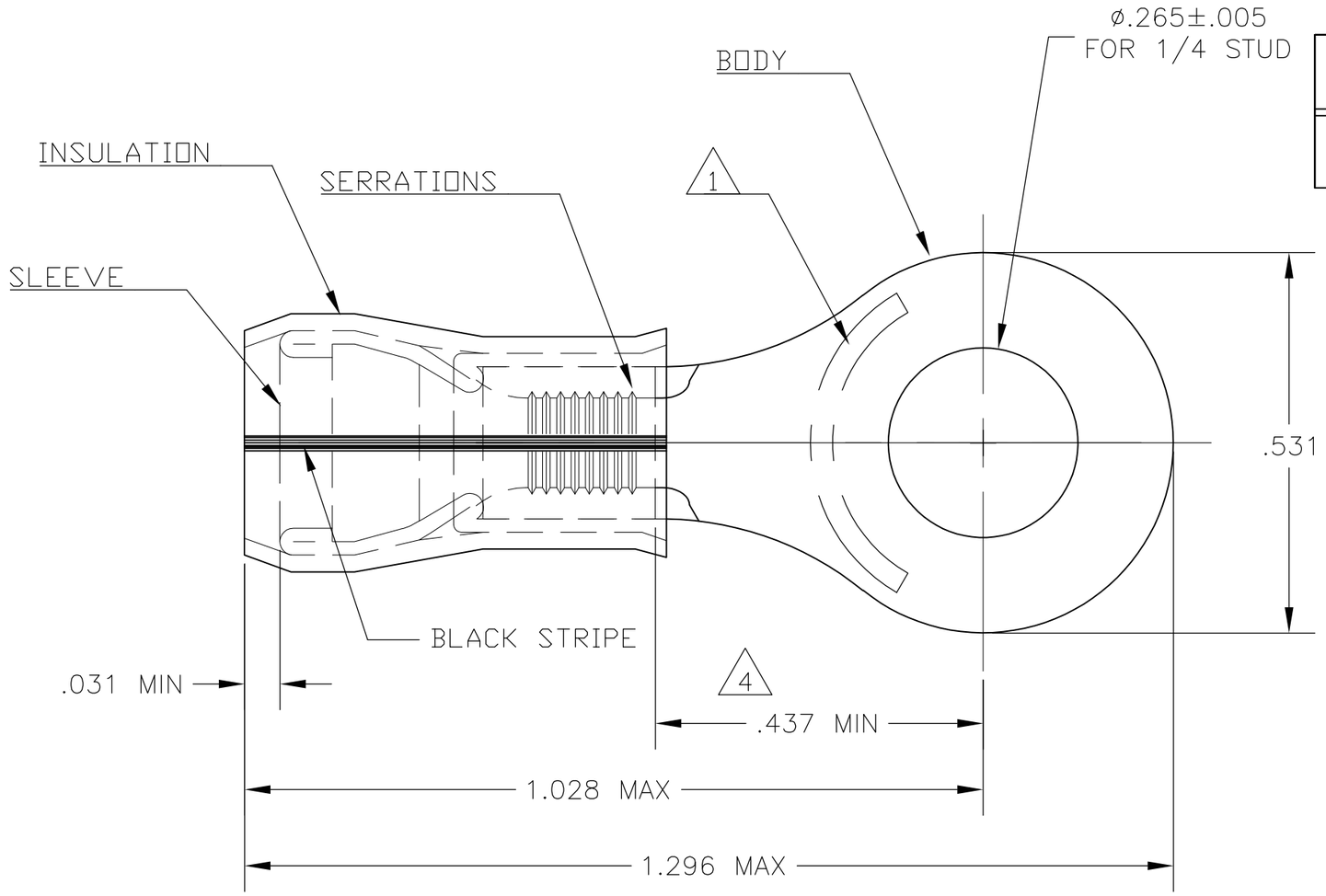

AMP WIRE RANGE	E13288 Listed	LR7189 Certified
16-14 AWG SOLID OR STRANDED	16-14 AWG SOLID OR STRANDED	16-14 AWG SOLID OR STRANDED

1. STAMP "AMP 16-14HD *"
2. FOR .150-.230 WIRE INSULATION DIA
3. TONGUE MATL THK IS .048±.002
4. APPLIES FROM THE METAL EDGE OF THE BARREL TO THE CENTER OF THE STUD.

QTY	PACKAGE TYPE	MATERIAL & FINISH	PART NO
1	327743 ON TAPE	BODY & SLEEVE: COPPER PER ASTM B-152 TIN PL PER ASTM B-545 INSULATION: NYLON - YELLOW (MIL-M-20693) TYPE I	1-327743-1
1	LOOSE PIECE		327743

AMP INCORPORATED
CUSTOMER SERVICE SYSTEMS

FOR ADDITIONAL PRODUCT INFORMATION OR COPIES OF DRAWINGS AND TECHNICAL DOCUMENTS	PRODUCT INFORMATION CENTER 1-800-522-6752
FOR APPLICATION TOOLING INFORMATION	TOOLING ASSISTANCE CENTER 1-800-722-1111
FOR ORDER ENTRY	1-800-526-5142

THIS DRAWING IS A CONTROLLED DOCUMENT FOR AMP INCORPORATED. IT IS SUBJECT TO CHANGE AND THE CONTROLLING ENGINEERING ORGANIZATION SHOULD BE CONTACTED FOR THE LATEST REVISION.

MAX RECOMMENDED OPERATING TEMPERATURE: 105°C [221°F]

VOLTAGE RATING: 300 V MAX

CIRCULAR MIL AREA: 1.04-2.62mm² [2,050-5,180] SOLID OR STRANDED

THIS DRAWING IS A CONTROLLED DOCUMENT.

DIMENSIONS: MM [INCHES]

TOLERANCES UNLESS OTHERWISE SPECIFIED:
0 PLC ± -
1 PLC ± -
2 PLC ± -
3 PLC ± -
4 PLC ± -
ANGLES ± 5°

MATERIAL -

FINISH -

DWN	jr ruth	24JUL09
CHK	TOM MICHIELUTTI	24JUL09
APVD	TOM MICHIELUTTI	24JUL09
PRODUCT SPEC	—	
APPLICATION SPEC	—	
WEIGHT	—	

Tyco Electronics
Tyco Electronics Corporation
Harrisburg, PA 17105-3608

NAME: RING TONGUE, PIDG, WIRE SIZE: 16-14HD
—

SIZE	CAGE CODE	DRAWING NO	RESTRICTED TO
A3	00779	C-327743	—

CUSTOMER DRAWING | SCALE 8:1 | SHEET 1 OF 1 | REV D1

AMP 1470-19 REV 31MAR2000