THIS DRAWING IS UNPUBLISHED. RELEASED FOR PUBLICATION -,- .
© COPYRIGHT - BY TYCO ELECTRONICS CORPORATION. ALL RIGHTS RESERVED.

LOC	DIST
AD	00

REVISIONS

P	LTR	DESCRIPTION	DATE	DWN	APVD
	B	ECO-05-009665	01FEB06	BSV	MM
	B1	REVISED PER ECO-09-022908	08OCT09	KK	AEG

1. HOUSING: GLASS FILLED POLYESTER; COLOR: BLACK.
2. CONTACT: PHOSPHOR BRONZE.
3. NICKEL UNDERPLATE: 0.00127 [.000050] MIN – ALL OVER.
4. TIN–LEAD PLATE: 0.00254 [.000100] MIN – SOLDER POSTS.
5. GOLD PLATE: 0.00076 [.000030] MIN – CONTACT AREA.
6. NICKEL PLATE PER MIL–G–45204.
   GOLD PLATE PER QQ–N–290.
7. AMP PART NUMBER AND DATE CODE ARE MARKED IN APPROXIMATE AREA SHOWN, EITHER SIDE.
8. RECOMMENDED PCB FINISHED HOLE DIA, 1.07±0.08 [.042±.003].
9. MATTE TIN PLATE: 0.00254 [.000100] MIN – SOLDER POSTS.
10. OBSOLETE PARTS: OBSOLETE CIS STREAMLINING PER D.RENAUD/D.SINISI

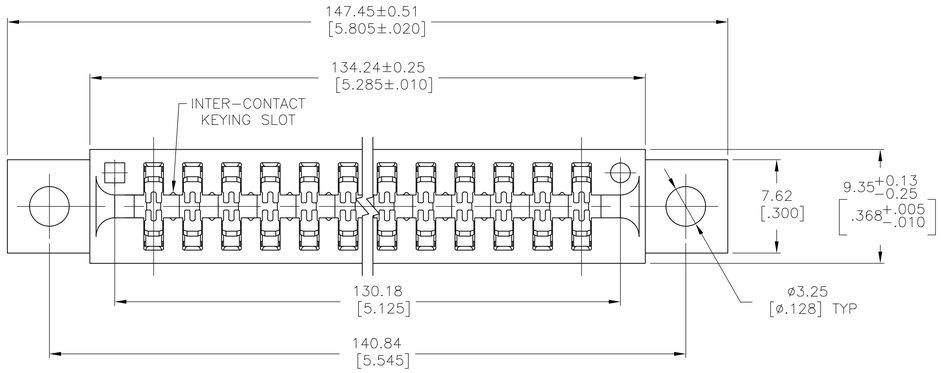

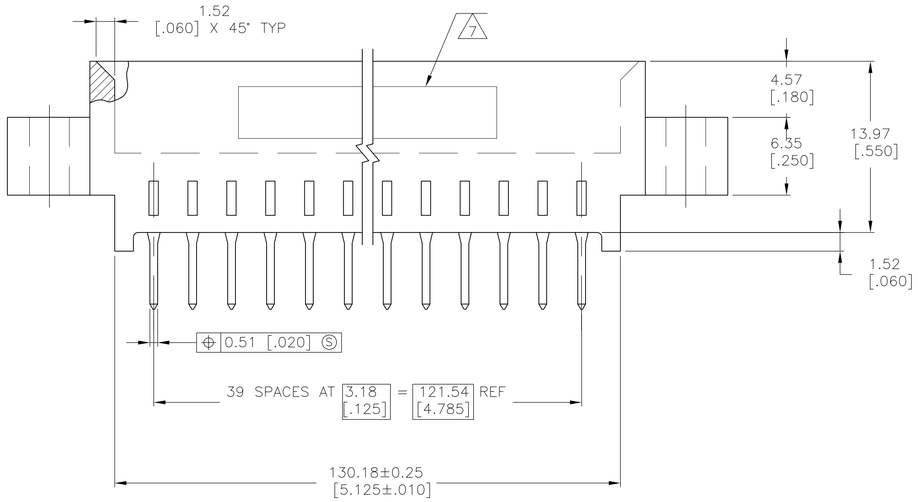

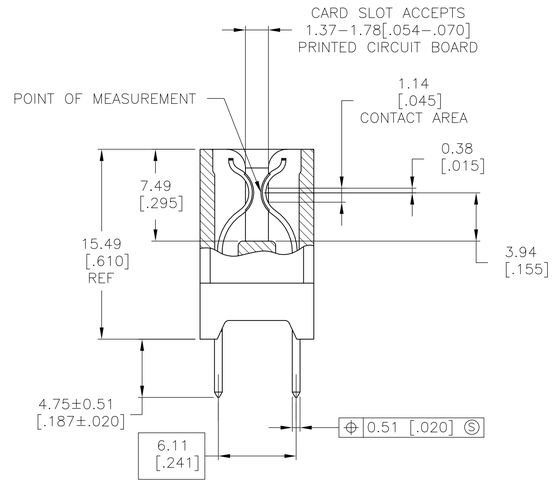

10 OBSOLETE	40	9 ~~5–650516–1~~
	40	650516–1
	NO. OF POSN	PART NUMBER

THIS DRAWING IS A CONTROLLED DOCUMENT.

DIMENSIONS: mm [INCHES]

TOLERANCES UNLESS OTHERWISE SPECIFIED:
0 PLC ± –
1 PLC ± –
2 PLC ± 0.13 [.005]
3 PLC ± –
4 PLC ± –
ANGLES ± –

MATERIAL
HOUSING: 1
CONTACT: 2

FINISH
CONTACT: 3 4 5 6

DWN R.SHIREY/UTA 11/6/91
CHK V.DIORAZIO 8–10–92
APVD J.DIORAZIO 8–10–92
PRODUCT SPEC 108–9039
APPLICATION SPEC –
WEIGHT –

Tyco Electronics
Tyco Electronics Corporation
Harrisburg, Pa 17105–3608

NAME
CONNECTOR ASSEMBLY,
STANDARD EDGE II,
3.18 [.125] CL

SIZE	CAGE CODE	DRAWING NO	RESTRICTED TO
A1	00779	C–650516	–

CUSTOMER DRAWING

SCALE	SHEET	OF	REV
4:1	1	1	B1