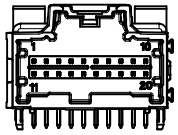

POLARIZATION OPTION A
P/N 34691-6200

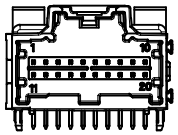

POLARIZATION OPTION B
P/N 34691-6201

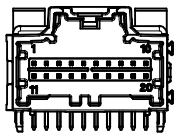

POLARIZATION OPTION C
P/N 34691-6202

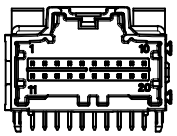

POLARIZATION OPTION D
P/N 34691-6203

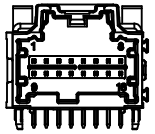

POLARIZATION OPTION A
P/N 34691-6160

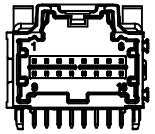

POLARIZATION OPTION B
P/N 34691-6161

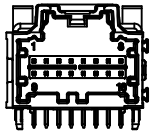

POLARIZATION OPTION C
P/N 34691-6162

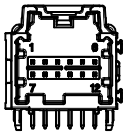

POLARIZATION OPTION A
P/N 34691-6120

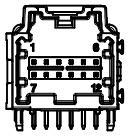

POLARIZATION OPTION B
P/N 34691-6121

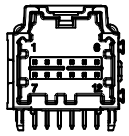

POLARIZATION OPTION C
P/N 34691-6122

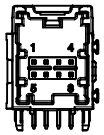

POLARIZATION OPTION A
P/N 34691-6080

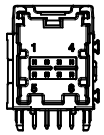

POLARIZATION OPTION B
P/N 34691-6081

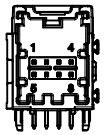

POLARIZATION OPTION C
P/N 34691-6082

NOTES: VALID UNLESS OTHERWISE SPECIFIED
1. GENERAL:

a. CONNECTOR HEADER MUST BE VALIDATED TO THE FOLLOWING FUNCTIONAL REQUIREMENTS:
POLARIZATION FEATURE EFFECTIVENESS = SEE PRODUCT SPECIFICATION
PIN RETENTION = USCAR-2 REV 4
SOLDERABILITY = SMES-152

b. APPLICATION REQUIREMENTS (REFERENCE ONLY) FOR:
SEE APPLICATION SPECIFICATION = AS-34729-020/AS-31408-100
SEE PRODUCT SPECIFICATION = PS-34729-020/PS-34729-020

c. PACKAGING SPECIFICATION: SEE CHART

2. DESIGN: MATERIALS:

a. SHROUD (PLASTIC HOUSING):
RESIN - SPS 30%GF - 20% REGRIND MAX. BY WEIGHT

b. 0.64MM PINS:
BASE MATERIAL: C26000
PLATING TYPE: AS NOTED

c. PIN ALIGNMENT PLATE: RESIN - SPS 30%GF - 20% REGRIND MAX. BY WEIGHT

3. PLATING REQUIREMENTS:

a. UNDERPLATING - OVERALL NICKEL

b. OVERPLATING - OVERALL TIN

4. INTERFACE: USCAR
064-U-008-2-Z01
064-U-012-2-Z02
064-U-016-2-Z02
064-U-020-2-Z02
SOME CHAMFERS HAVE BEEN MODIFIED TO IMRPROVE POLARIZATION EFFECTIVENESS. SEE AS-34729-002/AS-31408-100.

REMOVE PANEL VIEW
EC NO: UAU2015-1697 2015/05/14
DRWN: JFISCHER01 2015/05/14
CHKD:
APPR: RBAUMAN 2015/05/22
DESCRIPTION
REV

QUALITY SYMBOLS
▼=0
▽=0

GENERAL TOLERANCES (UNLESS SPECIFIED)	mm	INCH
4 PLACES	± ---	± ---
3 PLACES	± ---	± ---
2 PLACES	± 0.13	± ---
1 PLACE	± 0.25	± ---
ANGULAR ± 1 °		

DRAFT WHERE APPLICABLE MUST REMAIN WITHIN DIMENSIONS

DIMENSION STYLE: MM ONLY
SCALE: 2:1
DESIGN UNITS: METRIC
THIRD ANGLE PROJECTION

DRAWN BY: JFISCHER01 DATE: 2013/07/26
CHECKED BY: DATE:
APPROVED BY: RBAUMAN DATE: 2013/08/05

TITLE: STAC64 PAP R/A LONG PIN

MOLEX INCORPORATED

MATERIAL NO.: SEE CHART
DOCUMENT NO.: SD-34691-601
SHEET NO.: 1 OF 3
SIZE: D

THIS DRAWING CONTAINS INFORMATION THAT IS PROPRIETARY TO MOLEX INCORPORATED AND SHOULD NOT BE USED WITHOUT WRITTEN PERMISSION

MATERIAL NUMBER		CKT SIZE	DESCRIPTION	POL	COLOR	MATERIAL NUMBER		CKT SIZE	DESCRIPTION	POL	COLOR
TRAY PACKAGING PK-31300-892	TUBE PACKAGING PK-31301-063					TRAY PACKAGING PK-31300-892	TUBE PACKAGING PK-31301-063				
34691-6200	34691-9246	20	STAC64 RIGHT ANGLE HEADER ASSEMBLY	A	BLACK	34691-6120	34691-9623	12	STAC64 RIGHT ANGLE HEADER ASSEMBLY	A	BLACK
34691-6201	34691-9256	20	STAC64 RIGHT ANGLE HEADER ASSEMBLY	B	GREY	34691-6121	34691-9624	12	STAC64 RIGHT ANGLE HEADER ASSEMBLY	B	GREY
34691-6202	34691-9266	20	STAC64 RIGHT ANGLE HEADER ASSEMBLY	C	BROWN	34691-6122	34691-9625	12	STAC64 RIGHT ANGLE HEADER ASSEMBLY	C	BROWN
34691-6203	34691-9276	20	STAC64 RIGHT ANGLE HEADER ASSEMBLY	D	GREEN	34691-6080	34691-9680	8	STAC64 RIGHT ANGLE HEADER ASSEMBLY	A	BLACK
34691-6160	34691-9660	16	STAC64 RIGHT ANGLE HEADER ASSEMBLY	A	BLACK	34691-6081	34691-9681	8	STAC64 RIGHT ANGLE HEADER ASSEMBLY	B	GREY
34691-6161	34691-9661	16	STAC64 RIGHT ANGLE HEADER ASSEMBLY	B	GREY	34691-6082	34691-9682	8	STAC64 RIGHT ANGLE HEADER ASSEMBLY	C	BROWN
34691-6162	34691-9662	16	STAC64 RIGHT ANGLE HEADER ASSEMBLY	C	BROWN						

REMOVE PANEL VIEW
EC NO: UAU2015-1697
DRWN:JFISCHER01 2015/05/14
CHKD:
APPR:RBAUMAN 2015/05/22
DESCRIPTION
REV

QUALITY SYMBOLS
▼=0
▽=0

GENERAL TOLERANCES (UNLESS SPECIFIED)

	mm	INCH
4 PLACES	± ---	± ---
3 PLACES	± ---	± ---
2 PLACES	± 0.13	± ---
1 PLACE	± 0.25	± ---
ANGULAR ± 1 °		

DRAFT WHERE APPLICABLE MUST REMAIN WITHIN DIMENSIONS

DIMENSION STYLE: MM ONLY
SCALE: 4:1
DESIGN UNITS: METRIC
THIRD ANGLE PROJECTION

DRAWN BY: JFISCHER01 DATE: 2013/07/26
CHECKED BY: DATE:
APPROVED BY: RBAUMAN DATE: 2013/08/05

TITLE: STAC64 PAP R/A LONG PIN

MOLEX INCORPORATED

MATERIAL NO.: SEE CHART
DOCUMENT NO.: SD-34691-601
SHEET NO.: 2 OF 3
SIZE: D

THIS DRAWING CONTAINS INFORMATION THAT IS PROPRIETARY TO MOLEX INCORPORATED AND SHOULD NOT BE USED WITHOUT WRITTEN PERMISSION

tb_frame_D_P_AM_T
Rev. E 2006/04/15

CKT SIZE	DIM 'A'	DIM 'B'	DIM 'C'	DIM 'D'
20	34.04	31.57	27.94	25.54
16	28.96	26.49	22.86	20.46
12	23.88	21.41	17.78	15.38
8	18.80	16.53	12.70	10.30

RECOMMENDED PCB LAYOUT

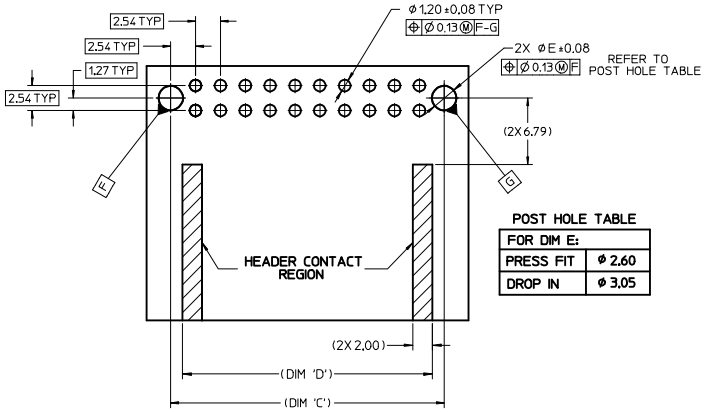

CONNECTOR PCB CONTACT SIDE

POST HOLE TABLE

FOR DIM E:	
PRESS FIT	Ø 2.60
DROP IN	Ø 3.05

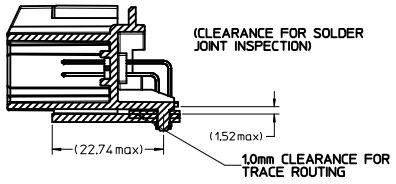

RECOMMENDED FOR REFLOW SOLDER

FLUSH MOUNTING:

SCALE 2:1

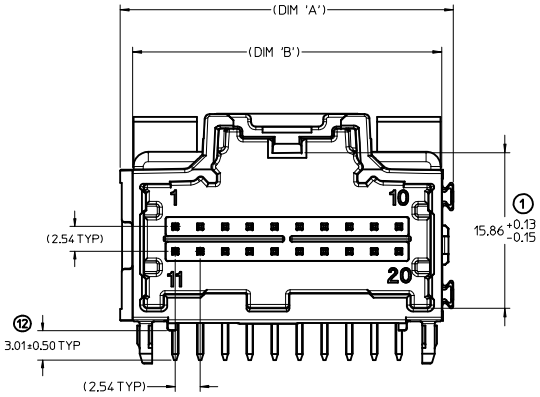

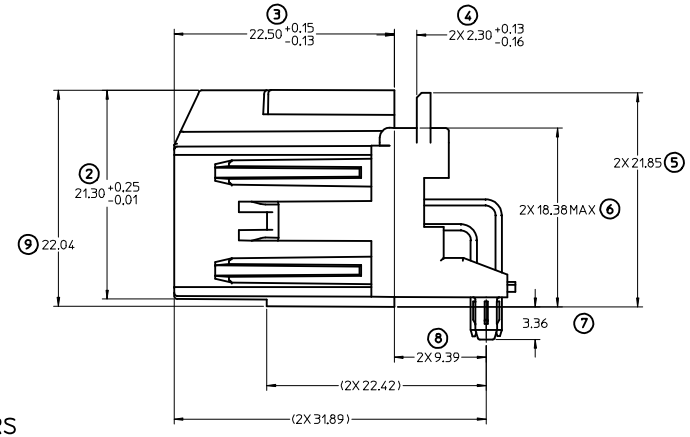

LAYOUT FOR 16 & 20 CKT. HEADERS
(20 CKT. OPTION 'A' SHOWN)

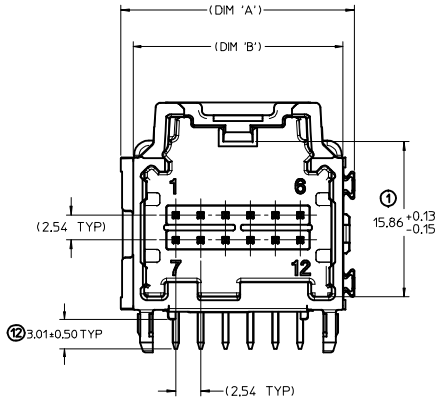

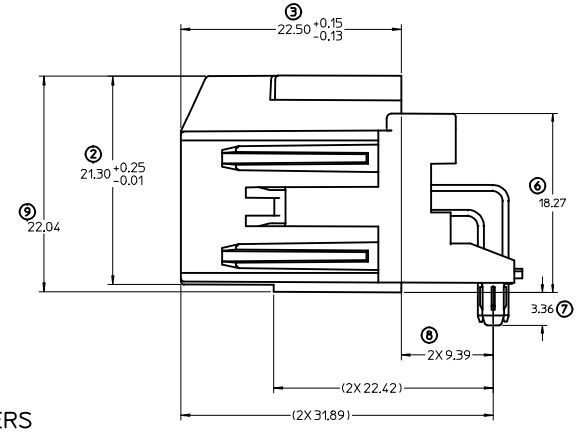

LAYOUT FOR 8 & 12 CKT. HEADERS
(12 CKT. OPTION 'A' SHOWN)

ENTER DESCRIPTION
EC NO: UAU2015-1697
DRWN:JFISCHER01 2015/05/14
CHKD:
APPR:RBAUMAN 2015/05/22
DESCRIPTION
REV

QUALITY SYMBOLS: 4 PLACES =0; 3 PLACES =0; 2 PLACES =0; 1 PLACE =0; 0 PLACE

GENERAL TOLERANCES (UNLESS SPECIFIED)

	mm	INCH
4 PLACES	± ---	± ---
3 PLACES	± ---	± ---
2 PLACES	± 0.13	± ---
1 PLACE	± 0.25	± ---
0 PLACE	± ---	± ---

ANGULAR ± 1 °

DRAFT WHERE APPLICABLE MUST REMAIN WITHIN DIMENSIONS

DIMENSION STYLE: MM ONLY
SCALE: 4:1
DESIGN UNITS: METRIC
THIRD ANGLE PROJECTION

DRAWN BY: JFISCHER01 DATE: 2013/07/26
CHECKED BY DATE
APPROVED BY: RBAUMAN DATE: 2013/08/05
MATERIAL NO.: SEE CHART

TITLE: STAC64 PAP R/A LONG PIN

molex

DOCUMENT NO.: SD-34691-601
SHEET NO.: 3 OF 3
SIZE: D

THIS DRAWING CONTAINS INFORMATION THAT IS PROPRIETARY TO MOLEX INCORPORATED AND SHOULD NOT BE USED WITHOUT WRITTEN PERMISSION