THIS DRAWING IS UNPUBLISHED. RELEASED FOR PUBLICATION 2000
© COPYRIGHT 2000 BY - ALL RIGHTS RESERVED.

REVISIONS

P	LTR	DESCRIPTION	DATE	DWN	APVD
	A7	RELEASED AS PER ECO-09-027197	19JAN10	KK	HMR
	A8	ECR-16-015318	16AUG2017	GR	MKO

NOTES:

1. MATERIAL: SEE TABLE
2. SURFACE: SEE TABLE
3. VARNISH ON THE INSIDE NOT NECESSARY
4. ChromitAL TCP - PASSIVATION
5. OBSOLETE PARTS: OBSOLETE CIS STREAMLINING PER D.RENAUD/D.SINISI

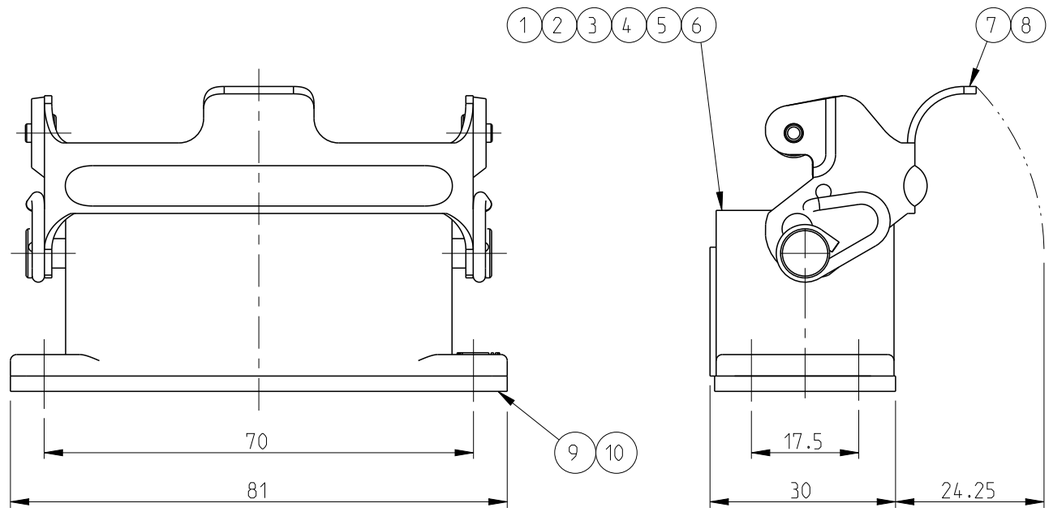

PN 0-1 AS SHOWN

PN 0-1, 0-5 AND 2-2

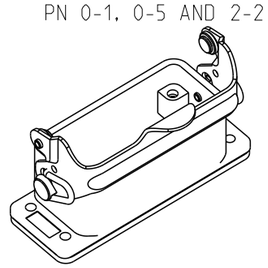

SCALE 1:2

PN ~~0-2~~, 0-3, 0-4 AND 1-2

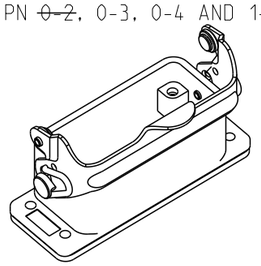

SCALE 1:2

PANEL-CUTOUT

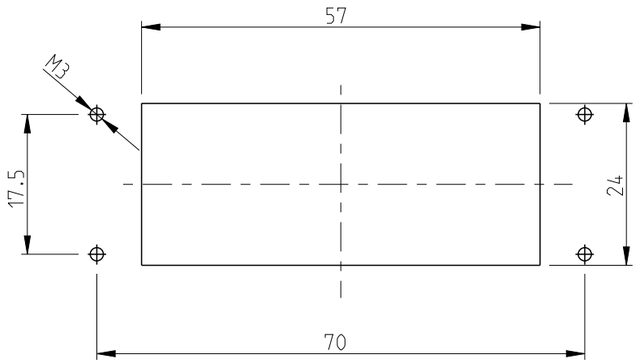

2-2	1-2	0-5 (OBSOLETE)	0-4	0-3	0-2 (OBSOLETE)	0-1	DESCRIPTION	MATERIAL (1)	SURFACE (2)	COLOR (2)	ITEM NO	REMARKS
-	-	-	1	-	-	-	FLANGE MOUNTED SEAL	NEOPRENE	CONDUCTIVE	BLACK	10	
1	1	1	-	1	1	1	FLANGE MOUNTED SEAL	NEOPRENE		BLACK	9	
1	-	1	-	-	-	1	LB- SIDE CLIP	STAINLESS STEEL			8	
-	1	-	1	1	1	-	LB- SIDE CLIP	STEEL	ZINC PLATED	BLUE	7	
-	-	1	-	-	-	-	SURFACE MOUNTED HOUSING, BOTTOM ENTRY	ALUMINIUM	HARD COAT	BLACK	6	Ø3.7mm
-	-	-	1	-	-	-	SURFACE MOUNTED HOUSING, BOTTOM ENTRY	ALUMINIUM	4		5	
-	-	-	-	-	-	1	SURFACE MOUNTED HOUSING, BOTTOM ENTRY	ALUMINIUM	HARD COAT	AL COLOR	4	
-	-	-	-	-	1	-	SURFACE MOUNTED HOUSING, BOTTOM ENTRY	ALUMINIUM		WITHOUT VARNISH	3	
1	-	-	-	-	-	-	SURFACE MOUNTED HOUSING, BOTTOM ENTRY	ALUMINIUM	ALUMINIUM OXIDE	BLACK RAL 9005	2	
-	1	-	-	1	-	-	SURFACE MOUNTED HOUSING, BOTTOM ENTRY	ALUMINIUM		GREY RAL 7001	1	

ORDERING TEXT
HA-K.10.AG-LB.SO
HA.10.AG-LB.SO
HA.10.AG-LB.KM
HA-EMV.10.AG-LB
HA-K.10.AG-LB
HA.10.AG-LB
HA-K.10.AG-LB

THIS DRAWING IS A CONTROLLED DOCUMENT.

DIMENSIONS: mm

TOLERANCES UNLESS OTHERWISE SPECIFIED:
n.ISO 8015:
n.ISO 2768-mH-E:
n.DIN 16901-120
0 PLC ±
1 PLC ±
2 PLC ±
3 PLC ±
4 PLC ±
ANGLES ±

MATERIAL (1)

FINISH (2)

DWN SCHNEIDER 4/8/1999
CHK SCHWEIGER 4/8/1999
APVD T.SCHNURPFEIL 4/8/1999
PRODUCT SPEC 108-74009
APPLICATION SPEC 114-74004
WEIGHT -

TE Connectivity

NAME SURFACE MOUNTED HOUSING, BOTTOM ENTRY HA10.AG-LB

SIZE	CAGE CODE	DRAWING NO	RESTRICTED TO
A3	00779	C-1102121	-

CUSTOMER DRAWING | SCALE 1:1 | SHEET 1 OF 1 | REV A8