THIS DRAWING IS UNPUBLISHED. RELEASED FOR PUBLICATION -,- .
© COPYRIGHT - By - ALL RIGHTS RESERVED.

LOC	DIST
J	—

REVISIONS 変更

P	LTR	DESCRIPTION	DATE	DWN	APVD
	D1	REVISED PER ECO-11-005140	28MAR11	RK	HMR

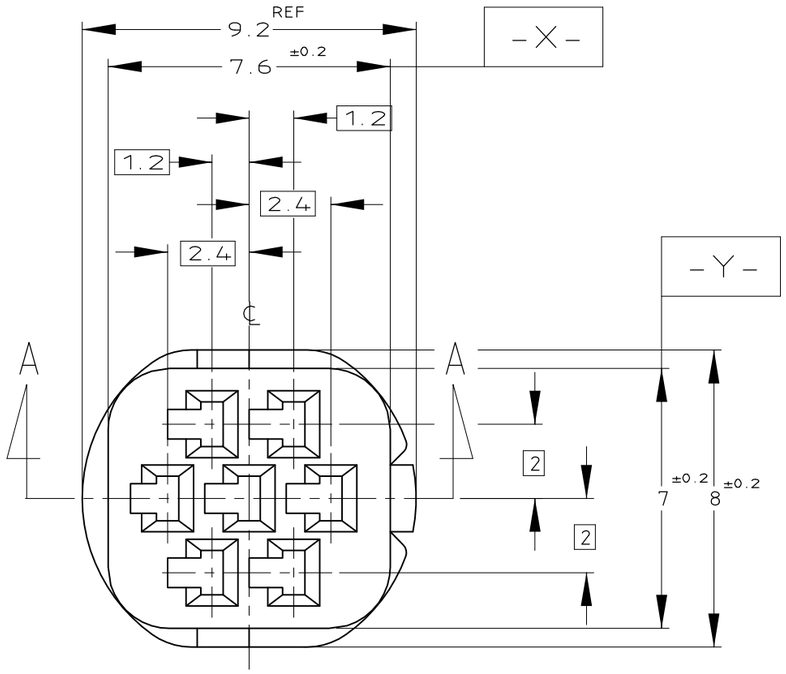

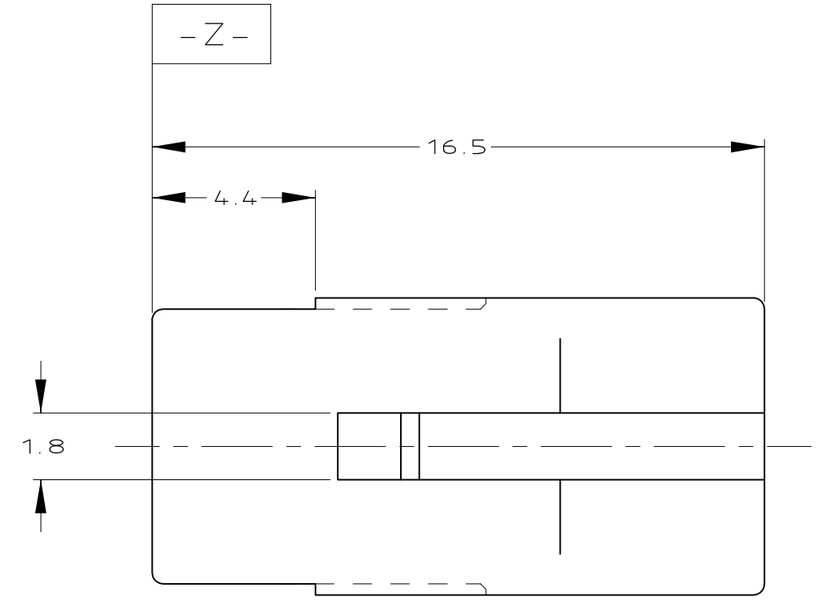

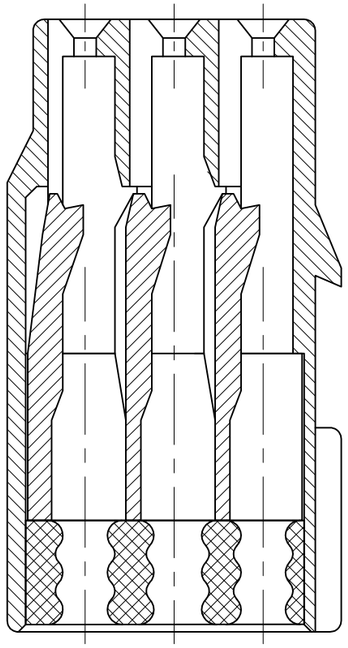

SECT. A-A

1. 嵌合相手ハウジング型番；917319
2. 内装するリセコンタクト型番；917308
3. 適用製品規格番号；108-5426
4. 取扱説明書：412-5653-1

1. THE MATING PLUG HSG P/N 917319
2. APPLED CONTACT P/N 917308
3. APPLICABLE PRODUCT SPEC No.108-5426
4. INSTRUCTION SHEET:412-5653

COLOR	PART NUMBER
YELLOW	917318-8
GRAY	917318-7
BLACK	917318-6
NATURAL	917318-5
LIGHT GREEN	917318-4

TOLERANCE UNLESS OTHERWISE SPECIFIED: 一般公差

0 < x ≦ 10	:	±0.2
10 < x ≦ 30	:	±0.25
30 < x ≦ 100	:	±0.3
ANGLE ; 角度		±0.3°

THIS DRAWING IS A CONTROLLED DOCUMENT.

DIMENSIONS: 単位：粍 mm

TOLERANCES UNLESS OTHERWISE SPECIFIED: 一般公差

0 PLC	± -
1 PLC	± -
2 PLC	± -
3 PLC	± -
4 PLC	± -
ANGLES	± -

MATERIAL 材料: PBT G

FINISH 仕上: SEE TABLE

DWN A. YAMAGUCHI 31JUL02
CHK T. HAYASHI 02AUG02
APVD H. YAMAGAMI 02AUG02
PRODUCT SPEC 製品規格: SEE TABLE
APPLICATION SPEC 取付適用規格: —
WEIGHT: 0.85g

CUSTOMER DRAWING

TE Connectivity

NAME 名称: MINI MULTI LOCK CONNECTOR 7POS PLUG HSG

SIZE	CAGE CODE	DRAWING NO 番号	RESTRICTED TO
A3	00779	C-917318	—

SCALE 尺度 5:1 | SHEET 1 OF 1 | REV D1