Customer Information Sheet

DRAWING No.: M80-5TIXXXXBI, M80-5TIXXXXBI-00-000-00-000 SHT 2 OF 2	IF IN DOUBT - ASK	©	NOT TO SCALE	THIRD ANGLE PROJECTION	ALL DIMENSIONS IN mm

SPECIFICATIONS:
- MATERIAL:
  - MOULDING = GLASS-FILLED PPS, UL94V-0, BLACK
  - CONTACT = PHOSPHOR BRONZE
  - BOARD/PANEL MOUNTS & NUTS = STAINLESS STEEL
  - BACKSHELL = ALUMINIUM ALLOY
- FINISH:
  - CONTACTS:
    - 05 = 0.75µ GOLD ALL OVER
    - 22 = 0.75µ GOLD ON CONTACT AREA, 3µ TIN/LEAD ON TAILS
    - 42 = 0.75µ GOLD ON CONTACT AREA, 3µ 100% TIN ON TAILS
  - BACKSHELL = NICKEL
- ELECTRICAL:
  - RF ATTENUATION = 10kHz to 400MHz @ >30dBs IN GENERAL ACCORDANCE WITH MIL STD 1377 (1971)
  - CURRENT RATING AT 25°C = 3.0A MAX
  - CURRENT RATING AT 85°C = 2.2A MAX
  - WORKING VOLTAGE = 120V AC/DC
  - VOLTAGE PROOF = 360V AC/DC
  - CONTACT RESISTANCE = 25 mΩ MAX
  - INSULATION RESISTANCE = 100 MΩ MIN
- MECHANICAL:
  - DURABILITY = 500 OPERATIONS
- ENVIRONMENTAL:
  - TEMPERATURE RANGE = -55°C TO +121°C
- PACKING:
  - SEE NOTES

FOR COMPLETE SPECIFICATION, SEE COMPONENT SPECIFICATION C005XX (LATEST ISSUE) AND C042XX (LATEST ISSUE)

NOTES:
1. SUPPLIED AS A KIT OF PARTS, CONNECTORS SHOWN ASSEMBLED FOR INFORMATION PURPOSES ONLY.
2. CONNECTORS WITH JACKSCREWS ASSEMBLED WILL BE SUPPLIED IN TUBES, SLOTTED NUTS WILL BE SUPPLIED LOOSE IN A BAG, BACKSHELLS WILL BE INDIVIDUALLY BAGGED. KITS WILL BE BULK PACKED INTO BOXES.
3. ALL PART LABELLING TO BE AS ORDER CODE, EITHER WITH TRAILING ZEROS OR LEFT BLANK AS PER ORDER CODE EXAMPLES 1 AND 2.

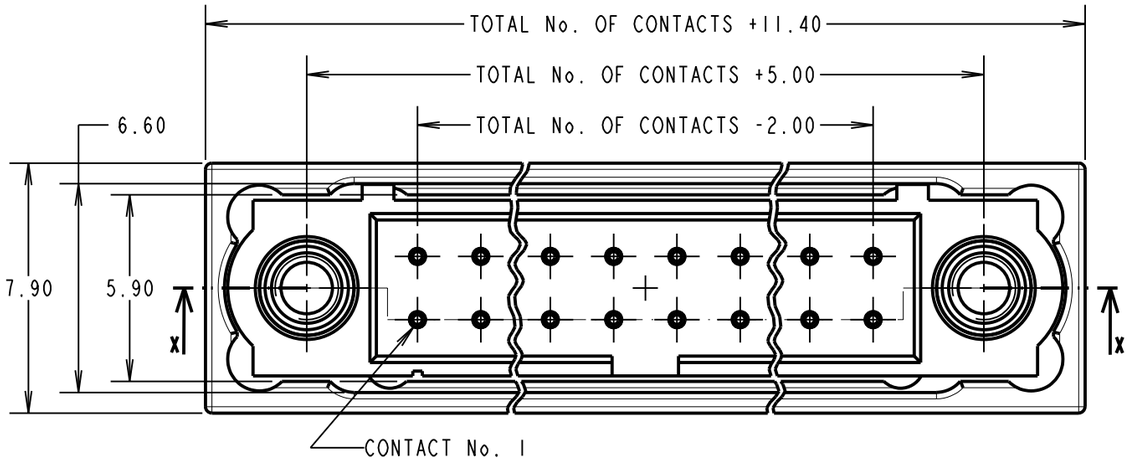

ORDER CODE: **M80-5TIXXXXBI-XX-XXX-XX-XXX**

TOTAL No. OF CONTACTS
06, 10, 14, 20, 26

FINISH CODE
- 05 - ALL OVER GOLD
- 22 - GOLD ON CONTACT AREA / TIN/LEAD ON TAIL
- 42 - GOLD ON CONTACT AREA / 100% TIN OVER NICKEL ON TAIL

NUMBER OF SPECIAL CONTACTS
X's CAN BE DISPLAYED AS TRAILING ZEROS OR LEFT BLANK
SEE EXAMPLE ORDER CODES FOR EXPLANATION.

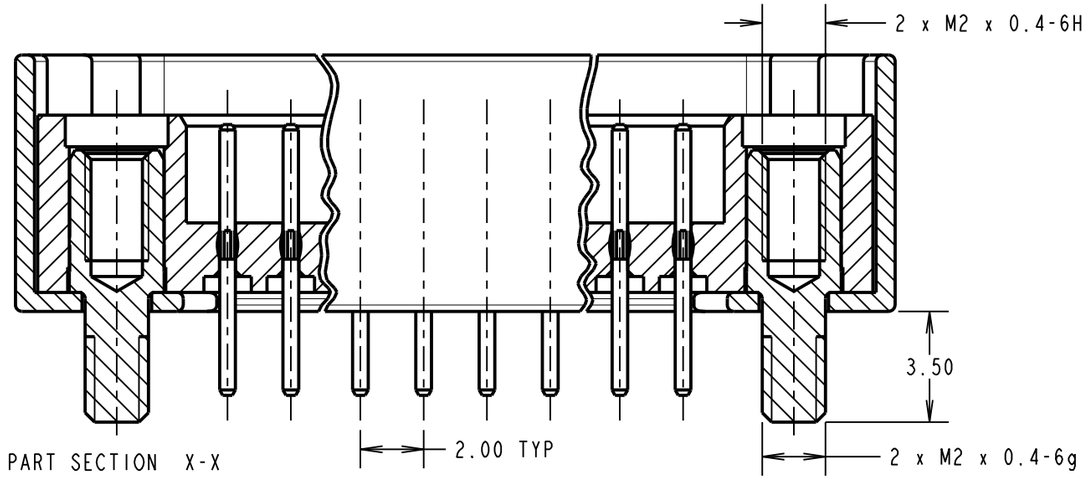

PART SECTION X-X

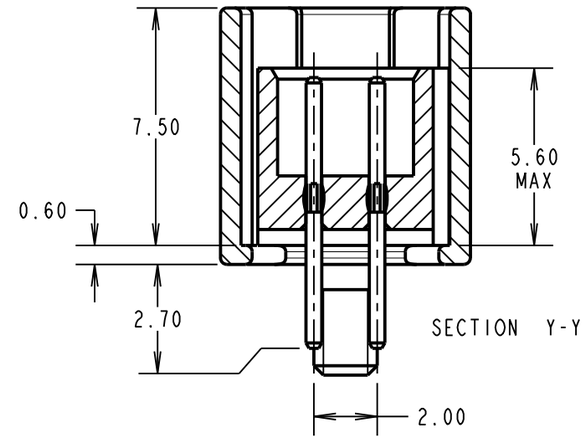

SECTION Y-Y

ASSEMBLED CONNECTOR SHOWN FOR ILLUSTRATION PURPOSES ONLY

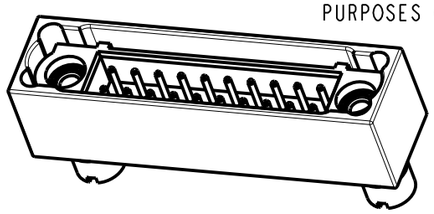

RECOMMENDED PCB LAYOUT

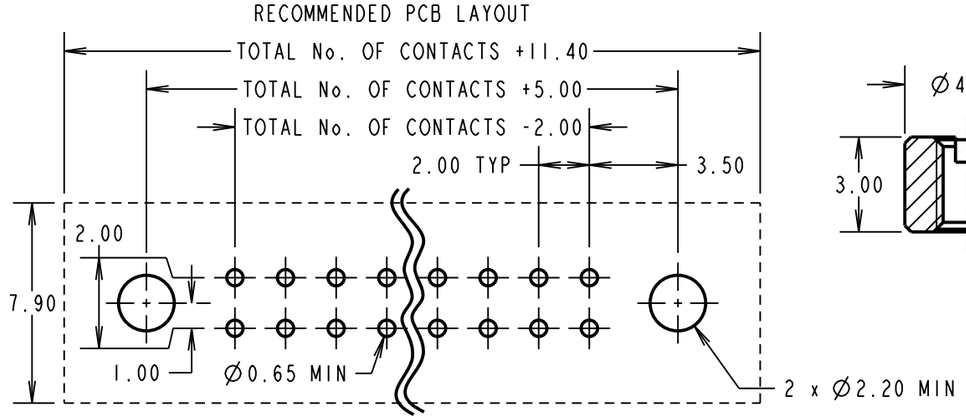

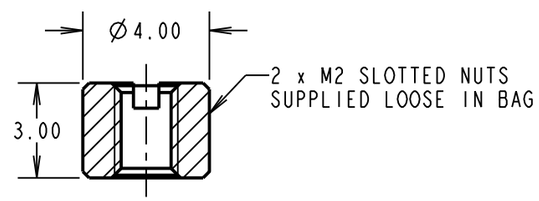

EXAMPLE ORDER CODE 1: CONNECTOR WITH 20 CONTACTS, GOLD ON CONTACT AREA AND 100% TIN ON TAIL, 2.7mm PC TAIL

M80-5TI2042BI-00-000-00-000

EXAMPLE ORDER CODE 2: CONNECTOR WITH 20 CONTACTS, GOLD ON CONTACT AREA AND 100% TIN ON TAIL, 2.7mm PC TAIL

M80-5TI2042BI

NAME	ISS.	DATE	C/NOTE
SF	2	22.09.10	10944
APPROVED:	SF		
CHECKED:	RA		
DRAWN:	S.FLOWER		
CUSTOMER REF.:			
ASSEMBLY DRG:			

HARWIN

HARWIN USA
TEL: 603 893 5376
FAX: 603 893 5396
mis@harwin.com

HARWIN Europe (UK)
TEL: 023 9231 4545
FAX: 023 9231 4590
mis@harwin.co.uk

HARWIN Asia
TEL: +65 6 779 4909
FAX: +65 6 779 3868
mis@harwin.com.sg

THIS DRAWING AND ANY INFORMATION OR DESCRIPTIVE MATTER SET OUT HEREON ARE CONFIDENTIAL AND COPYRIGHT PROPERTY OF THE HARWIN GROUP AND MUST NOT BE DISCLOSED, LOANED, COPIED OR USED FOR MANUFACTURING, TENDERING OR FOR ANY OTHER PURPOSE WITHOUT THEIR WRITTEN PERMISSION.

TOLERANCES
X. = ±1mm
X.X = ±0.25mm
X.XX = ±0.10mm
X.XXX = ±0.01mm
ANGLES = ±5°
UNLESS STATED

MATERIAL: SEE ABOVE

FINISH: SEE ABOVE

S/AREA: mm²

TITLE: DATAMATE J-TEK DIL VERTICAL 2.7mm PC-TAIL MALE ASSY WITH METAL BACKSHELL

DRAWING NUMBER: M80-5TIXXXXBI, M80-5TIXXXXBI-00-000-00-000

SHT 2 OF 2