THIS DRAWING IS UNPUBLISHED. RELEASED FOR PUBLICATION -,- .
© COPYRIGHT - BY TYCO ELECTRONICS CORPORATION. ALL RIGHTS RESERVED.

LOC	DIST
AF	50

REVISIONS

P	LTR	DESCRIPTION	DATE	DWN	APVD
	R	REVISED PER ECR-10-006099	07JUL10	HMR	PD

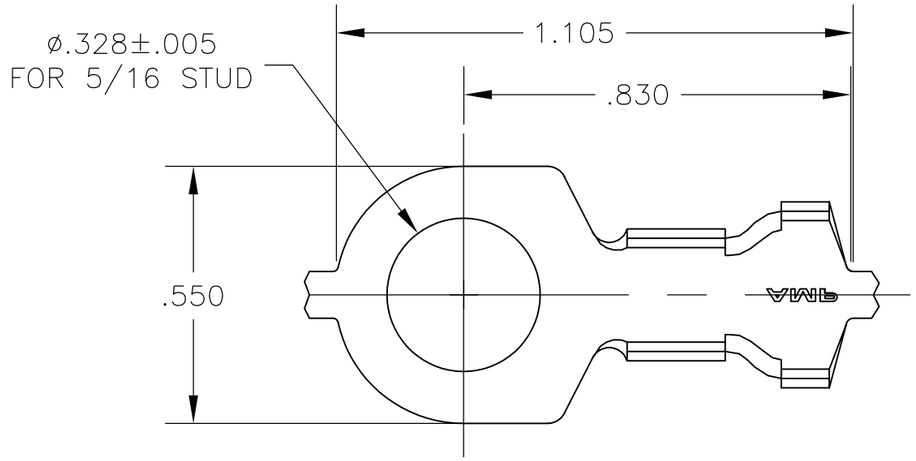

1. CONTINUOUS STRIP ON REELS
2. WIRE SIZE IS #10-#6 AWG
3. INSULATION RANGE IS .220-.315 DIA
4. REVERSE REELED

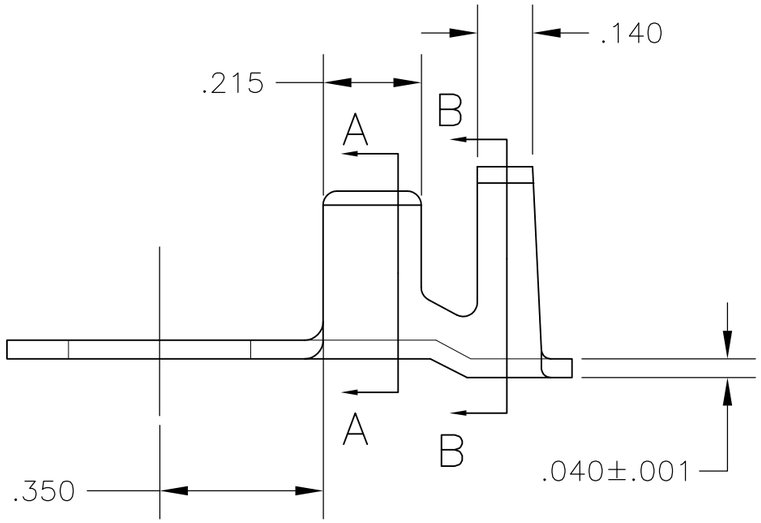

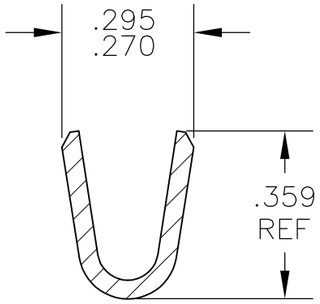

SECTION A-A

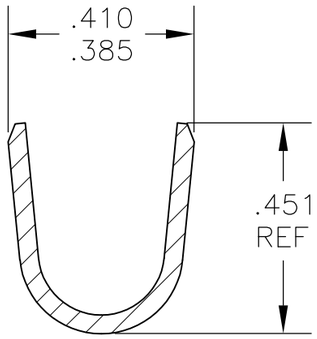

SECTION B-B

4	42913-3
	42913-2
	PART NO

THIS DRAWING IS A CONTROLLED DOCUMENT.

DIMENSIONS: INCHES

TOLERANCES UNLESS OTHERWISE SPECIFIED:

0 PLC	± -
1 PLC	± -
2 PLC	± -
3 PLC	± .015
4 PLC	± -
ANGLES	± 5°

MATERIAL: 081 BRASS

FINISH: TIN

DWN	jr ruth	08FEB05
CHK	D DECKER	08FEB05
APVD	D DECKER	08FEB05
PRODUCT SPEC	—	
APPLICATION SPEC	—	
WEIGHT	—	

CUSTOMER DRAWING

Tyco Electronics

Tyco Electronics Corporation
Harrisburg, PA 17105

NAME: RING TONGUE

SIZE	CAGE CODE	DRAWING NO	RESTRICTED TO
A3	00779	C-42913	—

SCALE	SHEET	REV
3:1	1 OF 1	R