THE INFORMATION CONTAINED IN THIS DRAWING IS THE SOLE PROPERTY OF ANDERSON POWER PRODUCTS. ANY REPRODUCTION IN PART OR WHOLE WITHOUT THE WRITTEN PERMISSION OF ANDERSON POWER PRODUCTS IS PROHIBITED.

REV.	DESCRIPTION OF CHANGES	BY:	DATE

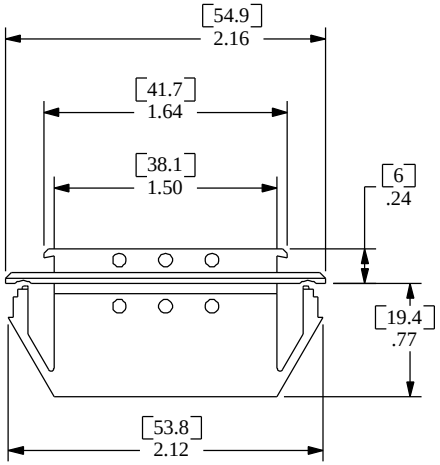

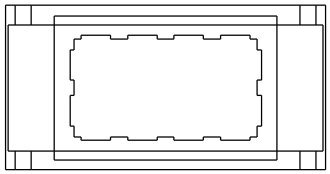

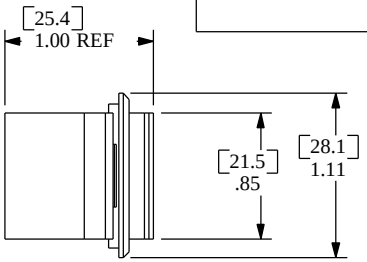

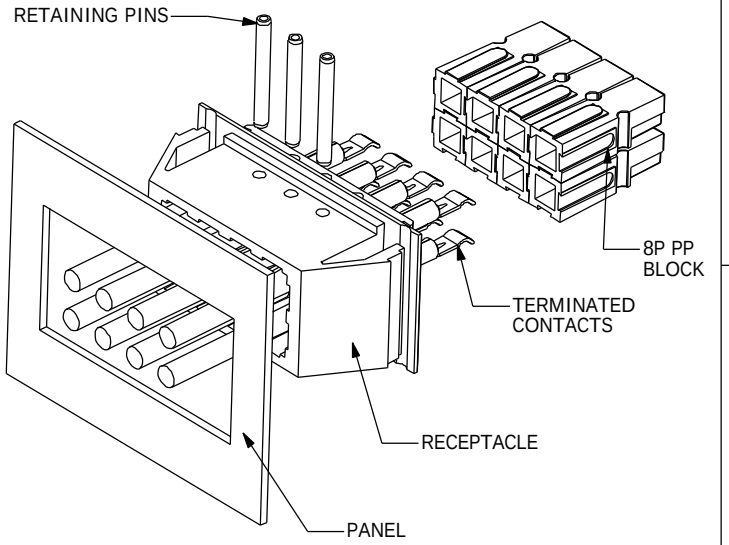

TYPICAL ASSEMBLY- REFER TO CATALOG FOR AVAILABLE CONFIGURATIONS

NOTES:

1. DESIGNED FOR PANELS .030- .134" (.76- 3.4mm) THICK
2. KNOCKOUT SIZE 1.00 X 1.88 (25.4 X 47.8)

NEXT ASSY	USED ON
APPLICATION	

ITEM NO.	PART OR IDENTIFYING NO.	NOMENCLATURE OR DESCRIPTION	MATERIAL SPECIFICATION	QTY REQD

COPYRIGHT 1999 ANDERSON POWER PRODUCTS. ALL RIGHTS RESERVED. UNAUTHORIZED REPRODUCTION HEREBY PROHIBITIED.

DIMENSIONS ARE IN INCHES
DIMENSIONS IN PARENTHESES [ ] ARE IN MILLIMETERS

TOLERANCES ARE:
2PL- ±.02 [±.5]

MATERIALS: *POLYCARBONATE*

FINISH *NONE*

DO NOT SCALE DRAWING

CAD GENERATED DRAWING, DO NOT MANUALLY UPDATE

APPROVALS		DATE
DRAWN	CMS	8/20/99
CHECKED	DJD	8/20/99
RESP ENG	UFN	8/21/99
MFG ENG	CHB	8/23/99
QUAL ENG	RO	8/23/99

ANDERSON POWER PRODUCTS

CATALOG NUMBER 1470G3
2X3 POWERPOLE PAK
SNAP-IN RECEPTACLE

SIZE	SPECIFICATION:	REV.
A	114167S3	0

SCALE		
NONE	CADFILES/01096	SHEET 1 OF 1