THIS DRAWING IS UNPUBLISHED. RELEASED FOR PUBLICATION -,- .
© COPYRIGHT - BY TYCO ELECTRONICS CORPORATION. ALL RIGHTS RESERVED.

LOC	DIST
AF	50

REVISIONS

P	LTR	DESCRIPTION	DATE	DWN	APVD
	H5	REVISED PER ECR-07-031129	28DEC07	HMR	GP

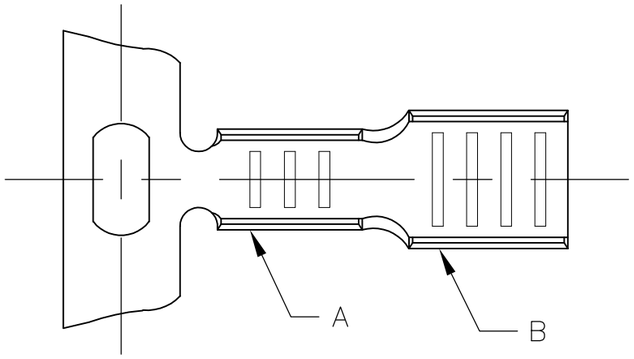

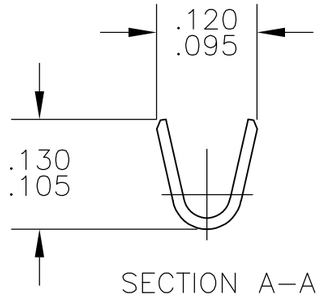

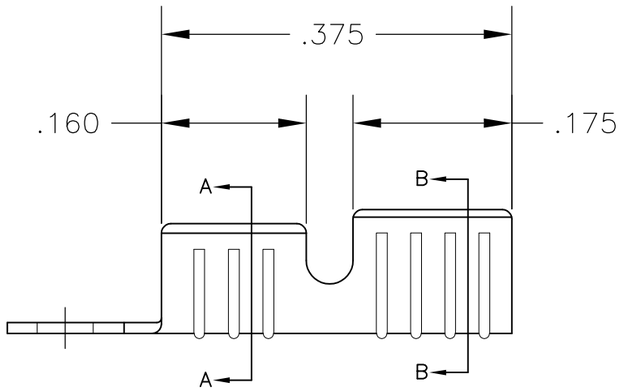

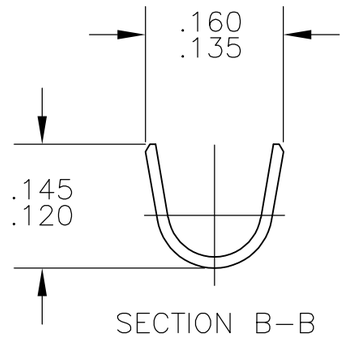

1. PRODUCT PROVIDED IN STRIP FORM REEL, BREAKS MAY BE PRESENT
2. REELING DIRECTION FOR THRU OR BUTT TYPE SPLICE APPLICATOR
3. REELING DIRECTION FOR PIGTAIL TYPE SPLICE APPLICATOR
4. WIRE RANGE BARREL A: 975-2700 CMA
   INSULATION RANGE BARREL B: .080 - .115 DIA
5. REF. CRIMP INFO:
   BARREL A - .080 "F"
   BARREL B - .120 "O"
6. PRELIMINARY - NOT FOR PRODUCTION.

WIRE SIZE AWG BARREL "A"	WIRE SIZE HEATER WIRE BARREL "B"	MATERIAL AND FINISH	PART NO
18 - 16 (2)	.100 DIA	.012 ST STEEL - NONE	61021-4 (6)
- (4) (3)	-	.012 STEEL - NICKEL	61021-3
OBSOLETE (2) ~~18 - 16~~	~~.100 DIA~~	~~.012 BRASS - NONE~~	~~61021-2~~
18 - 16 (2)	.100 DIA	.012 STEEL - NICKEL	61021-1

THIS DRAWING IS A CONTROLLED DOCUMENT.

DIMENSIONS: INCHES

TOLERANCES UNLESS OTHERWISE SPECIFIED:
0 PLC ± -
1 PLC ± -
2 PLC ± -
3 PLC ± .015
4 PLC ± -
ANGLES ± 1° 0'

MATERIAL: SEE TABLE
FINISH: SEE TABLE

DWN RAGHAVENDRA 21NOV2006
CHK G.D.PORTA
APVD G.D.PORTA
PRODUCT SPEC —
APPLICATION SPEC —
WEIGHT —

Tyco Electronics
Tyco Electronics Corporation
Harrisburg, PA 17105-3608

NAME: SPLICE

SIZE	CAGE CODE	DRAWING NO	RESTRICTED TO
A3	00779	C-61021	—

CUSTOMER DRAWING | SCALE 6:1 | SHEET 1 OF 1 | REV H5