THIS COPY IS PROVIDED ON A RESTRICTED BASIS AND IS NOT TO BE USED IN ANY WAY DETRIMENTAL TO THE INTERESTS OF PANDUIT CORP.

NOTES:
1. SEE CURRENT PRICE SHEET FOR PART NUMBER SUFFIX DESIGNATION FOR PACKAGE SIZE.

PANDUIT PART NUMBER	2 SCREW FASTENERS PROVIDED FOR MOUNTING JBA.	WEIGHT lb/100 pcs. (g/100 pcs.)
JBA	#6-32 x .88 LONG SELF TAPPING F.H.M.S.	1.76 (800)

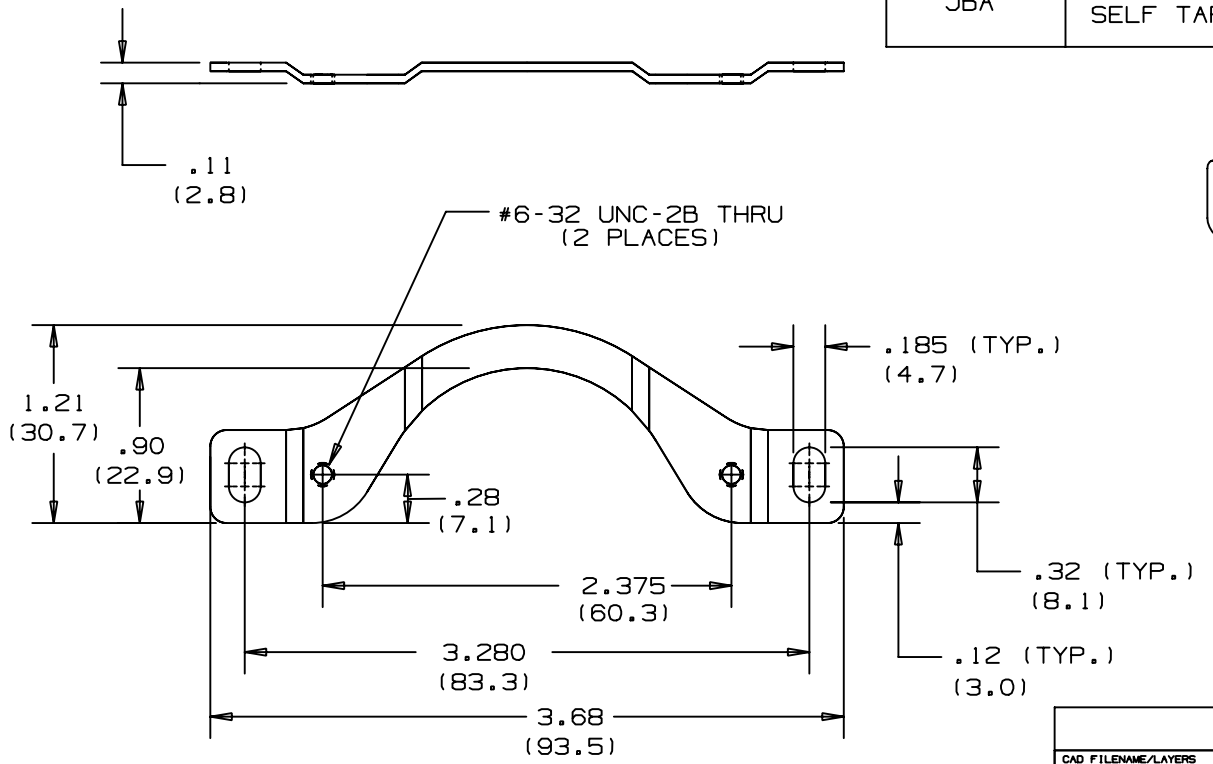

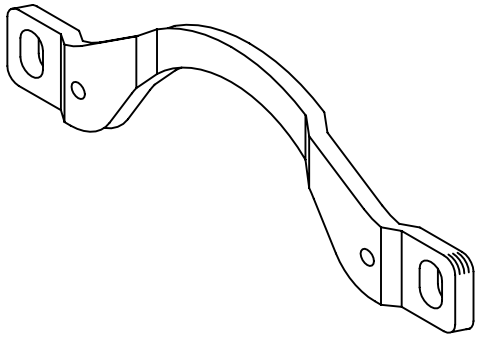

WPUS-JBADAPTER

CAD FILENAME/LAYERS

DIMENSIONS IN PARENTHESIS ARE METRIC

PANDUIT CORP. TINLEY PARK, ILLINOIS

JUNCTION BOX ADAPTER (JBA)

UNLESS OTHERWISE SPECIFIED, DIMENSIONAL TOLERANCES ARE:
(.X) ± (.XXX) ± .01(.2)
(.XX) ± .03(.8) ANGLES ±

UNLESS OTHERWISE SPECIFIED, ALL DIMENSIONS ARE GIVEN IN INCHES, THIRD ANGLE PROJECTION.

DRAWN BY: LDB
DATE: 7-23-86
CHK'D: WJB

MAT'L: 20 GAGE (.040") GALVANIZED STEEL

SCALE: FULL

DRAWING NO.: 34018-8

DWG SIZE: A

REV	DATE	BY	CHK	DESCRIPTION	ECN	-	R	CUST	SUP
R	7-23-86	LDB	WJB	RELEASED TO PRODUCTION	34018-8		R	WJB	