CASE FINISH	CURRENT (AMPS)	WORKING VOLTAGE				MAXIMUM DC RESISTANCE (OHMS)	MAXIMUM VOLTAGE DROP		MINIMUM CAPACITANCE (uF)	MIN. INSERTION LOSS PER MIL-STD-220, FULL LOAD, +25°C												
		-55°C TO +85°C		-55°C TO +125°C																		
		AC	DC	AC	DC		DC	AC		14 KHz	30 KHz	50 KHz	75 KHz	100 KHz	150 KHz	300 KHz	500 KHz	1 MHz	10 MHz	100 MHz	1 GHz	10 GHz
SOLDER	10	-----	50	---	28	0.01	0.10	---	---	--	15	--	--	--	28	31	--	42	56	--	70	--

PART MARKING:
M15733/24-0006
L OLSP2 DATE CODE
28VDC 10A 125°C
51-353-067

PACKAGE MARKING
STANDARD

MARKING NOTES:
N/A

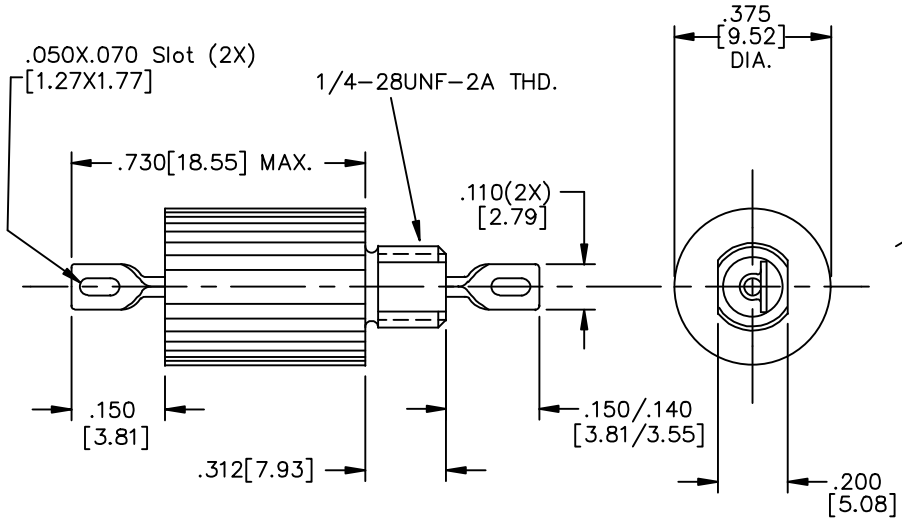

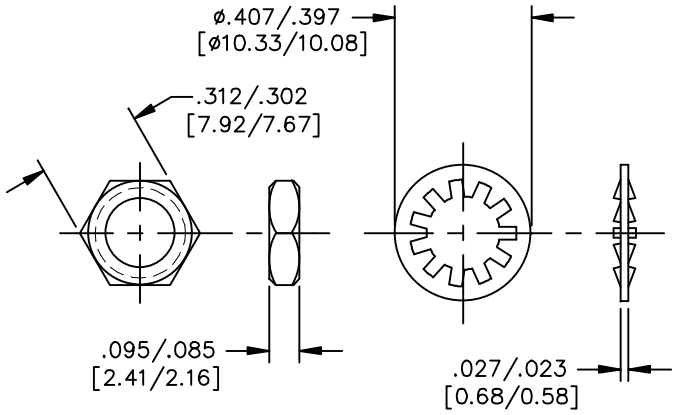

MTG. HARDWARE

SCHEMATIC

19 THIS PART IS CODED "NCA". API TECHNOLOGIES CORP. DOES NOT HAVE CHANGE AUTHORITY. CUSTOMER APPROVAL REQUIRED BEFORE PRODUCT/PROCESS CHANGES CAN BE MADE.

NOTES:
1) MOUNTING TORQUE NOT TO EXCEED 7in-lbs.

REV. NO.	CHANGE NOTICE
19	CN 64578-ENG
18	CN 59168-ENG
17	CN 185980
16	CN 183049

UNLESS OTHERWISE SPECIFIED DIMENSIONS ARE IN INCHES [MILLIMETERS]
DO NOT SCALE
THIRD ANGLE PROJECTION

TOLERANCES UNLESS OTHERWISE SPECIFIED
Fractions ±
Dec. .xx±
Dec. .xxx±
Angles ±0° 30'
CODE IDENT. NO. OLSP2

api technologies corp.
FAIRVIEW PENNSYLVANIA

Dwn. SLAGLE
Date 8-20-12
Engr. McALEVY
Sheet ___of ___

Description Low Pass EMI Filter

51-353-067

Quality Products From The Specialists In Electro-Magnetic Compatibility