REVISION AS

DO NOT SCALE FROM THIS PRINT

UNLESS OTHERWISE NOTED

DIMENSIONS ARE IN INCHES	TOLERANCES ARE:	
ONE PLACE DECIMALS: ± .1	THREE PLACE DECIMALS: ± .005	ANGLES ± 1°
TWO PLACE DECIMALS: ± .01	FOUR PLACE DECIMALS: ± .0020	

TITLE: 2 mm SOCKET STRIP

DWG NO: SMM-1XX-XX-XX-D-XX-XX-X-XX

SHEET 1 OF 2

SMM-1XX-XX-XX-D-XX-XX-X-XX

NO. OF POS. PER ROW
THROUGH HOLE: -01 THRU -40
SURFACE MOUNT: -02 THRU -40

LEAD STYLE
-01: THROUGH HOLE (C-56-01-X)
-02: SURFACE MOUNT (C-56-02-X)

PLATING OPTION
-S: SELECTIVE, 30 Au / 50 Ni NICKEL, ON CONTACT, MATTE TIN TAIL
-F: FLASH SELECTIVE, 3 Au / 50 Ni MIN ON CONTACT, MATTE TIN TAIL
-H: HEAVY GOLD, 30 Au / 50 Ni MIN ON CONTACT, 3 Au / 50 Ni MIN ON TAIL
-SM: SELECTIVE, 30 Au / 50 Ni MIN ON CONTACT, MATTE TIN TAIL
-FM: FLASH SELECTIVE, 3 Au / 50 Ni MIN ON CONTACT, MATTE TIN TAIL
-L: LIGHT SELECTIVE, 10 Au / 50 Ni MIN ON CONTACT, MATTE TIN TAIL

ROW OPTION
-D: DOUBLE ROW (USE SMM-XX-D-S)

POLARIZING OPTION
INDICATE POSITION (USE PK-07-N)

OPTION 1
-LC: LOCKING CLIP (USE 2 LC-05-TM) [AVAILABLE ONLY WITH LEAD STYLE -02, SEE * DIMS, SEE NOTE 6 & 13, SEE FIG 2)

OPTION 2
-P: PICK AND PLACE PAD (USE PPP-03)(SEE FIG 3)
-K: POLYAMIDE FILM PAD (USE K-500-300) (.005 [.13] THICKNESS WITH SILICONE ADHESIVE, SEE FIG 4) [2 POS MIN, SEE NOTE 10] (AVAILABLE ON LEAD STYLE -02 ONLY)

OPTION
TAPE & REEL
MAX. POSITIONS AVAILABLE: 27 VERTICAL/ 28 HORIZONTAL (SEE SHEET 2)

NOTES:

1.) RETENTION FORCE IN BODY TO BE: 1 lbs. MIN
2.) INSERTION FORCE TO BE: 3.0 oz. MAX.
3.) WITHDRAWAL FORCE TO BE: 0.5 oz. MIN.
4.) Ⓒ REPRESENTS CRITICAL DIMS. FOR STATISTICAL PROCESS CONTROL.
5.) [ ] DIMS ARE IN METRIC AND ARE NOT CONTROLLING DIMS.
6.) "-LC" OPTION FOR A 02 POSITION WILL HAVE ONLY ONE LOCKING CLIP (LC-05-T).
7.) "END WALLS" AFTER CUTTING SHOULD BE .017±.005.
8.) FOR -01 LEAD STYLE, LAYER PACKAGE POSITIONS -01 THRU -04.
9.) FOR -02 LEAD STYLE WITHOUT PICK & PLACE PAD, LAYER PACKAGE POSITION -02 ONLY.
10.) -02 THRU -05 POSITION WITH -K OR -P TO BE PACKAGED IN -TR ONLY. -06 THRU -40 POSITION AVAILABLE IN TUBE OR -TR PACKAGING.
11.) .010" MAX CUT FLASH.
12.) NO FLASH ALLOWED IN SOCKET OR EXTENDING BELOW LEADS.
13.) DUE TO THE HIGH AMOUNT OF INSERTION FORCE NEEDED, THE -LC OPTION IS NOT COMPATIBLE WITH AUTO PLACEMENT. SAMTEC RECOMMENDS MANUAL PLACEMENT FOR ALL ASSEMBLIES WITH THE -LC OPTION.
14.) INSULATOR MATERIAL: BLACK, LCP, UL 94 VO

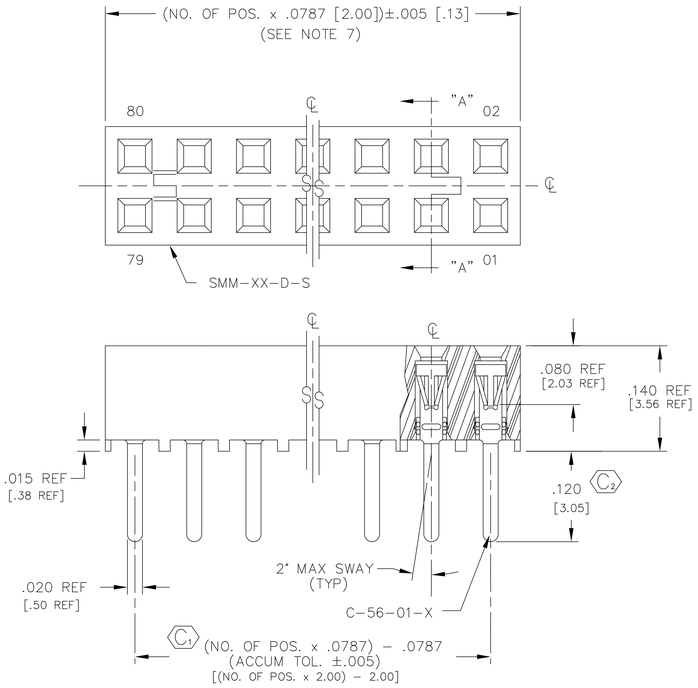

FIG. 1
-01: THROUGH HOLE

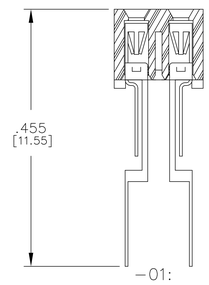

-01: IN PROCESS

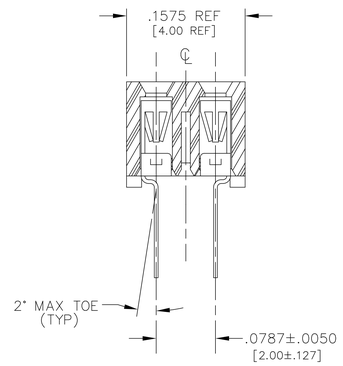

SECT "A-A"

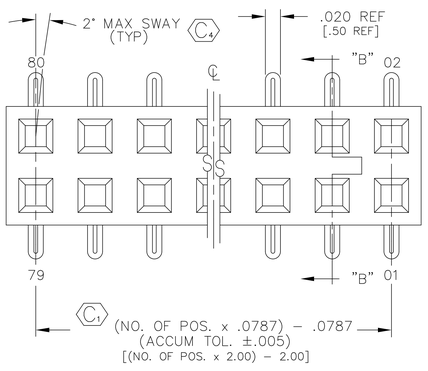

FIG. 2
-02: SURFACE MOUNT

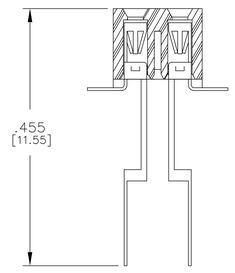

-02: IN PROCESS

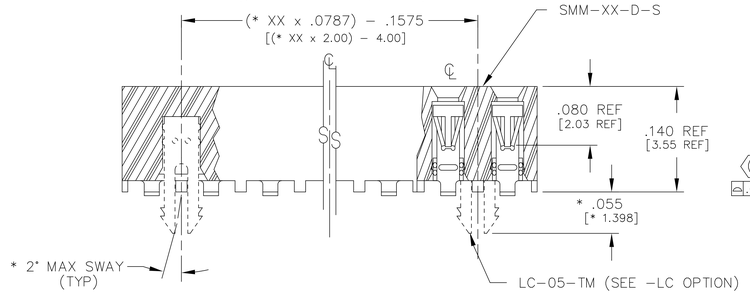

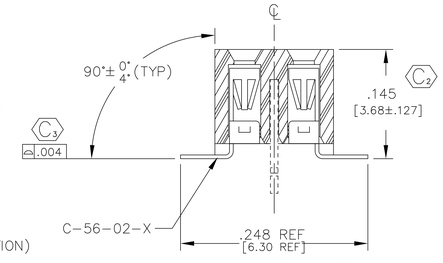

SECT "B-B"

"R" = No OF POS x .0787 [2.00]
"S" = {("R" - .394)/2}±.020

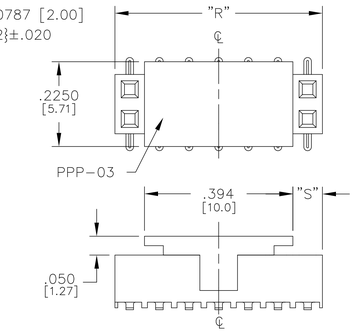

FIG. 3
-P: PICK AND PLACE PAD
(PLACE PPP-03 ABOUT C.L. AS SHOWN)
(SEE NOTE 10)

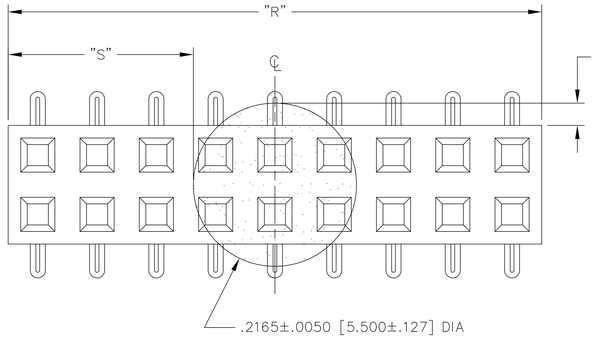

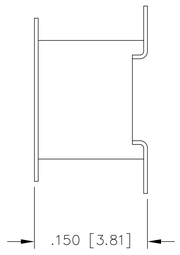

NOTE: "R" = USED MEASURED DIMENSION (REF)
"S" = {("R" - .2165 [5.50]) / 2} ±.020 [.51]

FIG. 4
-K: POLYAMIDE FILM PAD
[2 POSITION MINIMUM, SEE NOTE 10]

EXISPROD\ASSEMBLY\2MM
SMM-1XX-XX-X-D-XX-X-XX-XX-ASM

samtec
520 PARK EAST BLVD. NEW ALBANY, INDIANA 47150
PHONE (812) 944-6733 P.O. BOX 1147
CODE 55322

MADE BY: KOLB 5-21-91 | ENGINEER APPROVAL DEM | SMM-1XX-XX-XX-D-XX-XX-X-XX SHEET 1 OF 2

PROPRIETARY NOTE
THIS DOCUMENT CONTAINS INFORMATION CONFIDENTIAL AND PROPRIETARY TO SAMTEC INC. AND SHALL NOT BE REPRODUCED OR TRANSFERRED TO OTHER DOCUMENTS OR DISCLOSED TO OTHERS OR USED FOR ANY PURPOSE OTHER THAN THAT FOR WHICH IT WAS OBTAINED WITHOUT THE EXPRESSED WRITTEN CONSENT OF SAMTEC INC.