THIS DRAWING IS UNPUBLISHED. RELEASED FOR PUBLICATION -,- .
© COPYRIGHT - BY TYCO ELECTRONICS CORPORATION. ALL RIGHTS RESERVED.

LOC	DIST
AF	50

REVISIONS

P	LTR	DESCRIPTION	DATE	DWN	APVD
	D1	ECR-07-026634 (REDRAWN IN AUTOCAD)	20NOV07	HMR	DD

1 CONTINUOUS STRIP ON REELS.

2 WIRE RANGE: 20-16 AWG

3 INSULATION RANGE: 2.29-3.18 [.090-.125] DIA.

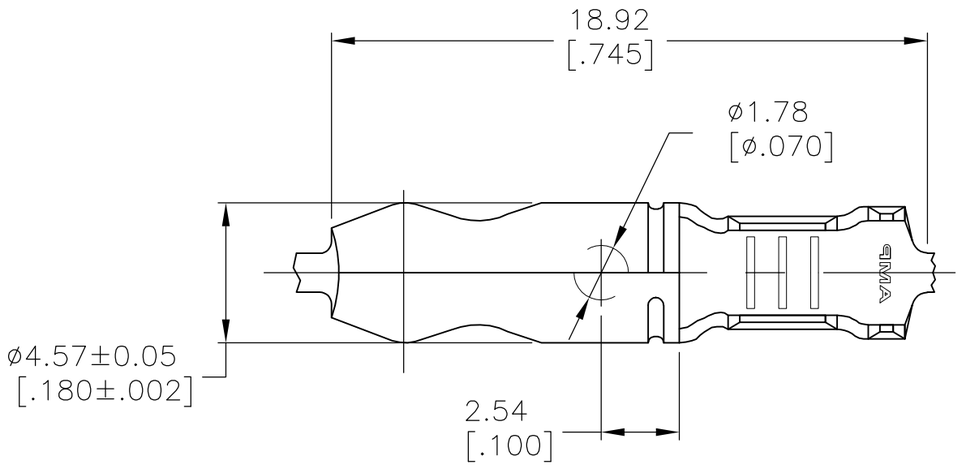

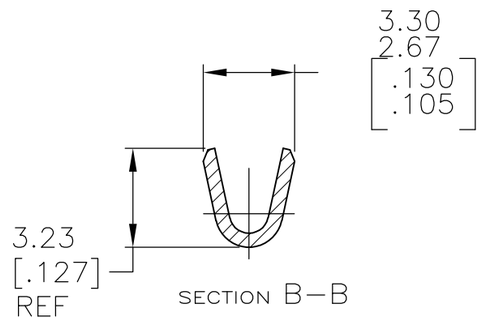

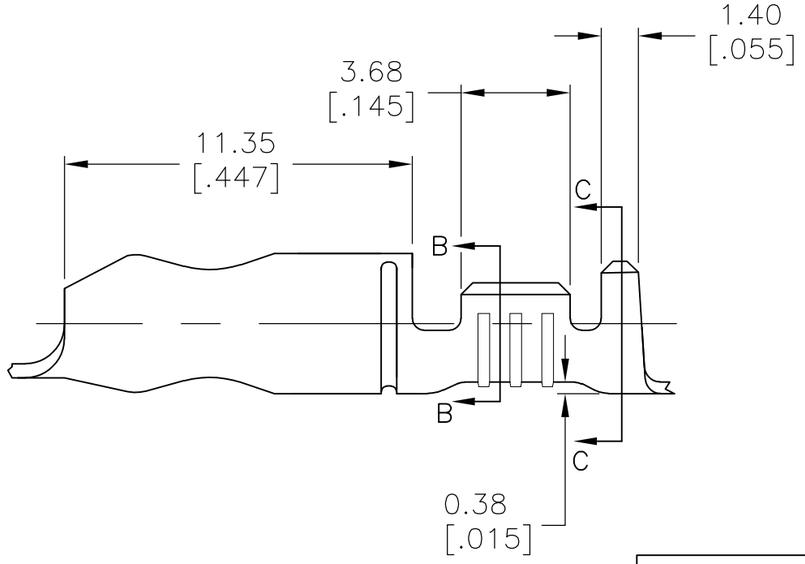

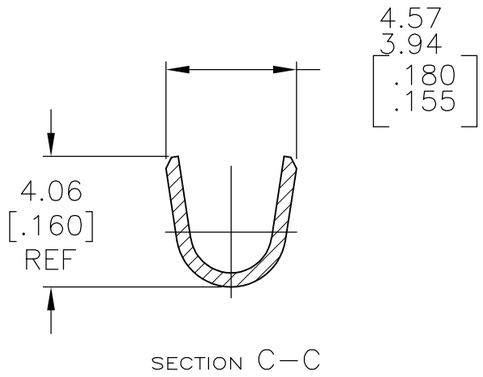

OBSOLETE	TIN	~~505038-2~~
	NONE	505038-1
	FINISH	PART NO

THIS DRAWING IS A CONTROLLED DOCUMENT.

DIMENSIONS: mm [INCHES]

TOLERANCES UNLESS OTHERWISE SPECIFIED:

0 PLC	± -
1 PLC	± -
2 PLC	± 0.38 [.015]
3 PLC	± -
4 PLC	± -
ANGLES	± 1°

MATERIAL: BRASS

FINISH: SEE TABLE

DWN	RAGHAVENDRA	20NOV2007
CHK	D DECKER	20NOV2007
APVD	D DECKER	20NOV2007
PRODUCT SPEC	—	
APPLICATION SPEC	—	
WEIGHT	—	

Tyco Electronics

Tyco Electronics Corporation
Harrisburg, PA 17105-3608

NAME: .180 DIA. SHUR PLUG

SIZE	CAGE CODE	DRAWING NO	RESTRICTED TO
A3	00779	C-505038	—

CUSTOMER DRAWING

SCALE	SHEET	REV
5:1	1 OF 1	D1