BACKPLANE MODULE
ASSEMBLY PART NUMBER ASSIGNMENT (5)

460 - X 0 X X - 0 X X

2 = CUSTOM LOAD. LEAD FREE
3 = L-SERIES
5 = UNIFORM LOAD.702X
6 = UNIFORM LOAD.BRUSH 60
7 = CUSTOM LOAD.LEADED
8 = ADVANCE MATE UNIFORM LOAD 702X
9 = ADVANCE MATE UNIFORM LOAD BRUSH
L = CUSTOM LOAD. LEADED. ADVANCED PLATING
N = CUSTOM LOAD. LEAD FREE. ADVANCED PLATING

MODULE ORIENTATION
0-OPEN

NO. OF POSN
10=10 POSN
25=25 POSN

SIGNAL CONTACT LOAD (SEE TABEL 2)
PIN LENGTH
1 = 4.75
2 = 6.25
3 = 4.25
4 = 5.15

PLATING CODE (6)
0 = 735 4=804
1 = 732 5=803
2 = 769 6=806
3 = 768 7=805

ZONE	REV	SCR NUMBER	DESCRIPTION	BY	DATE	APPROVED
ALL	-	29470	NEW RELEASE			
-	A	34907	ADDED ADVANCE MATE SHIELD	JSG	11/13/00	LEBLANC
-	B	39370	ADDED VHDM TO TITLE	SG	8/1/02	YEH
-	C	40819	MODIFIED TABLE III	SG	1/7/03	W.LI
-	D	WLII-5V6M7T.VER02	REVISE DATUMS.ADD TABLE IV	M.LEE	10/3/03	W.LI
-	E	KLEC-66RSE5.VER01	MODIFIED TITLE BLOCK	SG	9/20/04	LEBLANC
-	F	DMAG-6BSMYQ.VER01	ADDED LEAD FREE PLATING OPTION	GKR	05/04/05	S.BAIR
	G	MLEE-6KBPQ3.VER01	REPLACED DRAWING FORMAT	ML	01/20/06	C.SAMMIS
	H	SBAR-6NHKJR.VER01	UPDATED TABLE 2 .TABLE 3 AND TABLE 4	HCL	04/10/06	K.LEBLANC
	J	CSAS-82ZPTE.VER01	ADDED NEW PART NUMBERS FOR NEW PLATING CODES IN ASSEMBLY PART NUMBER ASSIGNMENT TREE DELETED TABLE 4. MODIFIED NOTE 5 AND 6.REMOVED NOTE 15.	HCL-MH	02/26/2010	C.SAMMIS

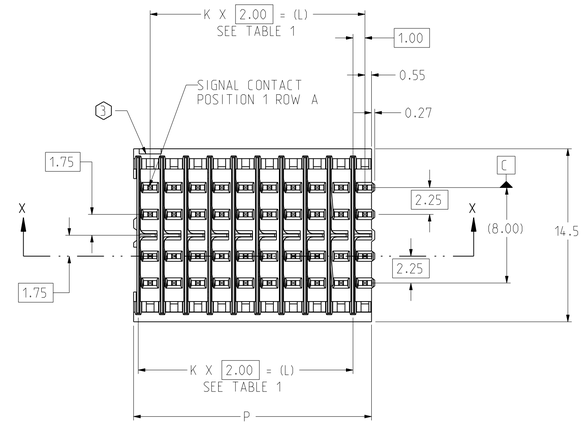

TABLE 1

ASSEMBLY PART NUMBER	BACKPLANE INSULATOR MODULE	K	(L)	P	TOTAL NUMBER OF SIGNAL CONTACTS	TOTAL NUMBER OF GROUND SHIELDS
460-X010-0XX	460-0010-070	9	(18.00)	20.0	40	10
460-X025-0XX	460-0025-070	24	(48.00)	50.0	100	25

TABLE 2

ASSEMBLY PART NUMBER	SIGNAL CONTACT	CONTACT LENGTH
460-(3.5.8)0XX-0X1	260-0022- (6)	4.75
460-(3.5.8)0XX-0X2	260-0021- (6)	6.25
460-(3.5.8)0XX-0X3	260-0023- (6)	4.25
460-(3.5.8)0XX-0X4	260-0024- (6)	5.15
460-(6.9)0XX-0X1	260-0002- (6)	4.75
460-(6.9)0XX-0X2	260-0001- (6)	6.25
460-(6.9)0XX-0X3	260-0003- (6)	4.25
460-(6.9)0XX-0X4	260-0004- (6)	5.15

TABLE 3

ASSEMBLY PART NUMBER	SHIELD CONTACT (SEE DETAIL W SH 2)	SHIELD HEIGHT
460-30XX-0XX	N/A	N/A
460-50XX-0XX	272-0021- (6)	5.3
460-60XX-0XX	272-0001- (6)	5.3
460-80XX-0XX	272-0024- (6)	5.5
460-90XX-0XX	272-0004- (6)	5.5

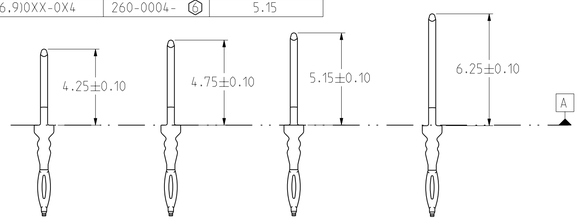

DETAIL U
SCALE 6/1
SEE TABLE 2

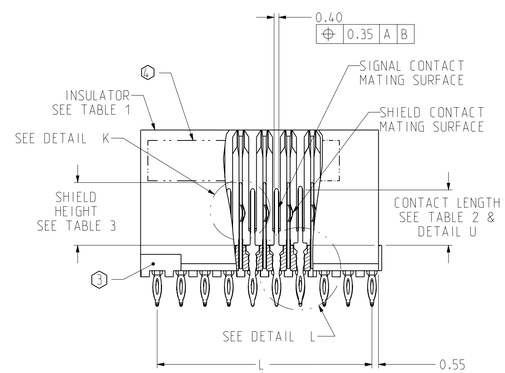

SECTION X-X

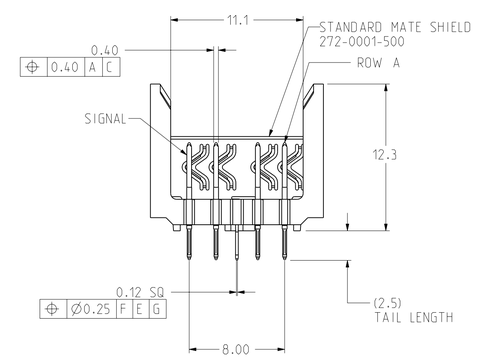

NOTES:
(1) WHEN ASSEMBLED TO BACKPLANE INSULATOR. CONTACTS MUST SEAT FLUSH WITH INSULATOR TOP SURFACE TO MAXIMUM ALOWABLE GAP OF 0.25.
(2) SHIELDS SHALL BE STRAIGHT WITH MAXIMUM ALLOWABLE BOW OF 0.15 MM ON EITHER SIDE OF SHIELD. SEE DETAIL "X". SEE SHEET 2.
(3) OPEN. NOTCH END DESIGNATES COLUMN 1.
(4) PART MARKING AS FOLLOWS:
LINE 1: ATCSYYWWDHH (LOGO. YEAR. WEEK. DAY. HOUR)
LINE 2: MODULE PART NUMBER (460-#######).
LINE 3. WORK ORDER NUMBER (VH *######). WHERE "*" DENOTES MANUFACTURING LOCATION.
(5) IF MODULE PART NUMBER IS 460-7XXX-XXX OR 460-2XXX-XXX OR 460-LXXX-XXX OR 460-NXXX-XXX. PART REVISION. MODULE ORIENTATION. NUMBER OF COLUMNS. PLATING CODE. AND SIGNAL CONTACT LOAD ARE NOT APPLICABLE.
(6) LAST 3 DIGITS OF THE SIGNAL CONTACT AND SHIELD CONTACT PART NUMBERS ARE DETERMINED BY PLATING CODE.MATCHED PLATING DEFINED BY THE 9th DIGIT OF ASSEMBLY PART NUMBER.
735 - Ni SULFAMATE. STANDARD GOLD. LEADED
732 - Ni SULFAMATE. HIGH GOLD. LEADED
769 - Ni SULFAMATE. STANDARD GOLD. LEAD-FREE
768 - Ni SULFAMATE. HIGH GOLD. LEAD-FREE
804 - NANO Ni. STANDARD GOLD. LEADED
803 - NANO Ni. HIGH GOLD. LEADED
806 - NANO Ni. STANDARD GOLD. LEAD-FREE
805 - NANO Ni. HIGH GOLD. LEAD-FREE
7. FOR HASL ONLY. PTH TO BE Ø0.610-Ø0.495 MM.
(8) ROUTE DIFFERENTIAL PAIRS THROUGH PINS A-B & D-E.

9. DATUM -A- IS DEFINED AS THE WAFER MATING SURFACE OF THE PLASTIC INSULATOR.

10. DATUM -B- IS DEFINED AS THE CENTERLINE OF THE TOP OF THE OUTERMOST WAFER SLOTS IN THE INSULATOR WALLS.

11. DATUM -C- IS DEFINED AS THE CENTERLINE OF THE CONNECTOR MEASURED FROM THE TWO OUTERMOST COLUMNS OF SIGNAL CONTACT HOLES.

12. DATUM -E- IS DEFINED AS THE CENTERLINE OF THE CONNECTOR MEASURED FROM THE TWO OUTERMOST COLUMNS OF SIGNAL CONTACTS TAIL SIDE.

13. DATUM -F- IS DEFINED AS THE BOTTOM SURFACE OF THE PLASTIC INSULATOR.

14. DATUM -G- IS DEFINED AS THE CENTERLINE OF THE CONNECTOR MEASURED FROM THE TWO OUTERMOST ROWS OF SIGNAL CONTACTS TAIL SIDE.

15. REMOVED

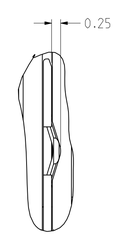

DETAIL K
SCALE 12/1/1

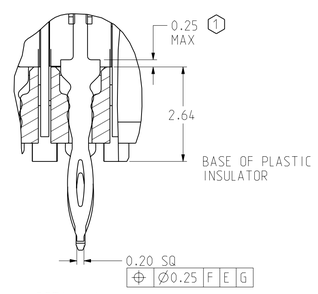

DETAIL L
SCALE 12/1/1

TOLERANCES	
0.0	±0.25
0.00	±0.13
0.000	± -
ANGLES	± -

UNLESS OTHERWISE SPECIFIED DIMENSIONS ARE IN MM. DECIMAL MARKER IS A PERIOD

DESIGN 3/30/99 DP/JSG
DRAWN
CHK 11/22/99 D.Provencher
APVD 4/24/00 D.Provencher

Amphenol TCS
A Division of Amphenol Corporation
200 Innovative Way, Nashua, NH 03062 603.879.3000

TITLE BACKPLANE OPEN ENDED MODULE
ASSEMBLY. 5 ROW VHDM-HSD

PART NO. SEE PART NUMBER TREE | REV N/A
DRAWING NO. C-460-5010-500 | REV J
Pro/E type: P1018-ASSY-BP-10-OPENGUIDE | 1.17
Pro/E DRAWING: C-460-5010-500 | J.0

INTERPRET PER ASME Y14.5M
CODE IDENT 31413
CUSTOMER USE DRAWING
SIZE D | SCALE 4/1 | SHEET 1 OF 2

DRW NO.	SH	REV
C-460-5010-500	2	J

ZONE	REV	SCR NUMBER	DESCRIPTION	BY	DATE	APPROVED
			SEE SHEET 1			D.Provencher

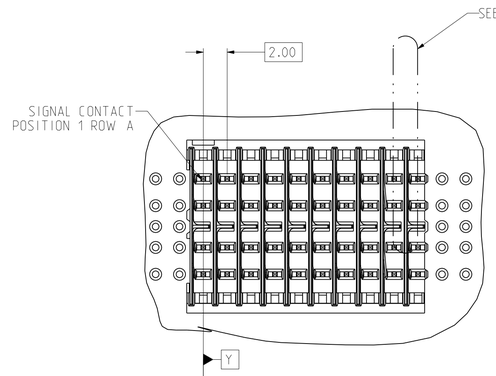

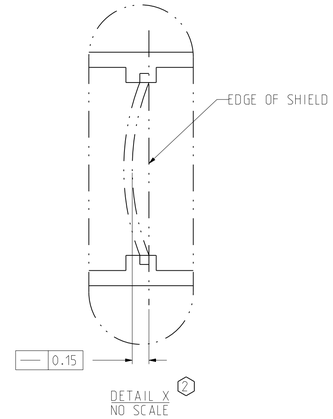

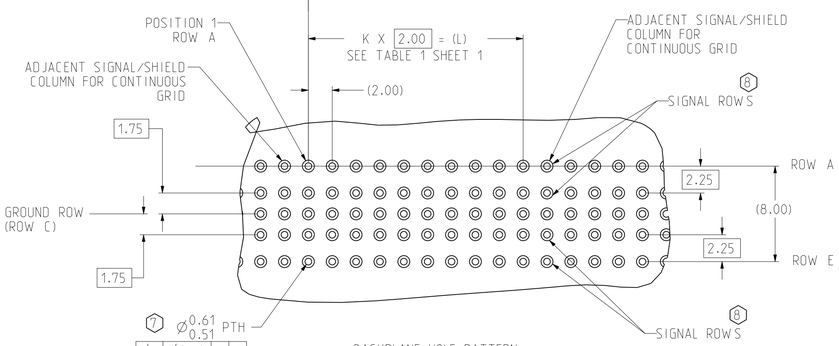

BACKPLANE HOLE PATTERN
SIGNAL MODULE
CONNECTOR SIDE

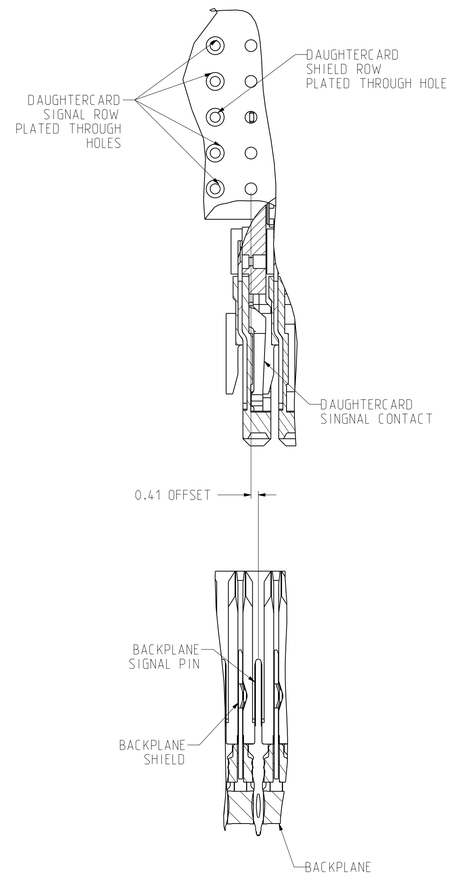

DETAIL V
SCALE 6/1/1

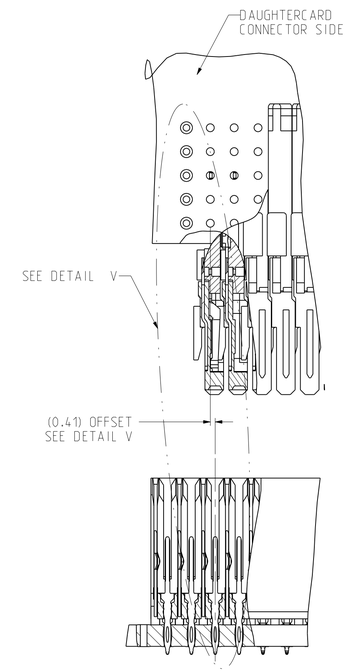

SECTION X-X

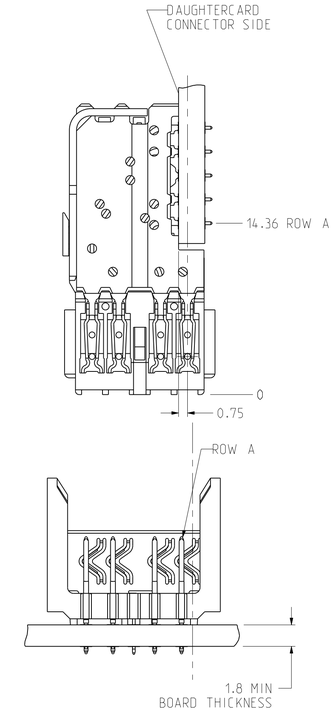

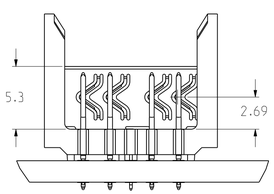

STANDARD MATE SHIELD
272-0001-XXX
DETAIL W

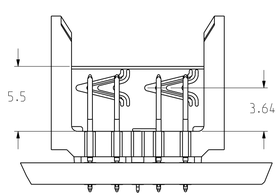

ADVANCE MATE SHIELD
272-0004-XXX
DETAIL W

TOLERANCES		DESIGN 3/30/99 DP/JSG
0.0	±0.25	DRAWN
0.00	±0.13	CHK 11/22/99 D.Provencher
0.000	± -	APVD 4/24/00 D.Provencher
ANGLES	± -	

UNLESS OTHERWISE SPECIFIED DIMENSIONS ARE IN MM. DECIMAL MARKER IS A PERIOD

INTERPRET PER ASME Y14.5M

CODE IDENT 31413

CUSTOMER USE DRAWING

Amphenol TCS
A Division of Amphenol Corporation
200 Innovative Way, Nashua, NH 03062 603.879.3000

TITLE BACKPLANE OPEN ENDED MODULE
ASSEMBLY, 5 ROW VHDM-HSD

PART NO.	REV
SEE PART NUMBER TREE	N/A
DRAWING NO. C-460-5010-500	J
Pro/E type: P1018-ASSY-BP-10-OPENGUIDE	1.17
Pro/E DRAWING: C-460-5010-500	J.0

SIZE D | SCALE 5/1 | SHEET 2 OF 2

DRW NO. C-460-5010-500 SH 2 REV J