THIS DRAWING IS UNPUBLISHED. RELEASED FOR PUBLICATION -,- .
© COPYRIGHT - By - ALL RIGHTS RESERVED.

LOC	DIST
G	14

REVISIONS

P	LTR	DESCRIPTION	DATE	DWN	APVD
	G5	REVISED PER ECO-15-006387	27APR2015	NK	DR

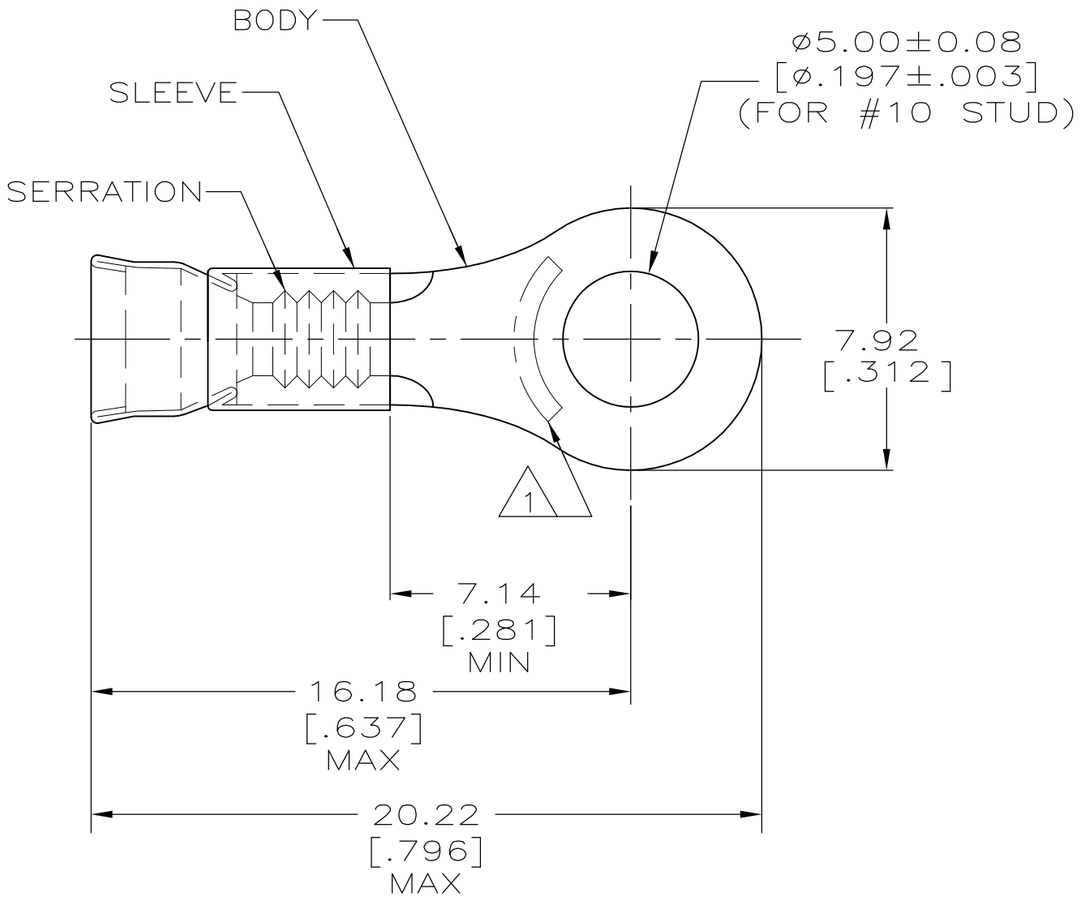

1. 22-18 STAMP AMP APPROX AS SHOWN 22-16 TERMINALS ARE STAMPED 22-18 IN ACCORDANCE WITH MILITARY SPEC SAE AS7928 COMMERCIAL WIRE RANGE IS 22-16
2. WIRE INSUL DIA, 2.67-3.56[.105-.140]
3. TONGUE MATL THK, 0.79±0.05[.031±.002]
4. PRELIMINARY-NOT FOR PRODUCTION.
5. BODY: GOLD PLATE 0.00127[.000050]MIN EXT. THK PER ASTM B488 TYPE 1, CODE C OVER NICKEL FLASH PER SAE AMS QQ-N-290 OVER WOODS, NICKEL FLASH PER ASTM B558.
6. CARBON CONTENT ≤.02%

MAX OPERATING TEMP	FINISH	STAMPING	BODY MATERIAL	SLV COLOR	QTY	PACKAGE TYPE	PART NO
649°C [1200°F] (4)	—	AMP 22-18	(6) NICKEL PER ASTM B162	ORANGE	5000	ON TAPE, REEL	1-321898-1
649°C [1200°F]	—	AMP 22-18AL	ALUMEL	GREEN	500	LOOSE PIECE	1-321898-0
260°C [500°F]	(5)	AMP 22-18	(6) NICKEL PER ASTM B162	ORANGE	1000	LOOSE PIECE	321898-1
649°C [1200°F]	—	AMP 22-18	(6) NICKEL PER ASTM B162	ORANGE	1000	LOOSE PIECE	321898

AMP INCORPORATED
CUSTOMER SERVICE SYSTEM

FOR ADDITIONAL PRODUCT INFORMATION OR COPIES OF DRAWINGS AND TECHNICAL DOCUMENTS	PRODUCT INFORMATION CENTER 1-800-522-6752
FOR APPLICATION TOOLING INFORMATION	TOOLING ASSISTANCE CENTER 1-800-722-1111
FOR ORDER ENTRY	1-800-526-5142

MAX RECOMMENDED OPERATING TEMPERATURE: SEE TABLE

VOLTAGE RATING: - -

CIRCULAR MIL AREA: 0.26mm² - 1.65mm² [509-3260]

STRANDED WIRE

THIS DRAWING IS A CONTROLLED DOCUMENT.

DIMENSIONS: mm [INCHES]

TOLERANCES UNLESS OTHERWISE SPECIFIED:

0 PLC	± -
1 PLC	± -
2 PLC	± 0.20[.008]
3 PLC	± -
4 PLC	± -
ANGLES	± -

MATERIAL: BODY, SEE TABLE SLEEVE, NI SIL PER ASTM B122

FINISH: SLV COLOR, SEE TABLE

DWN	L OLMEDA	10OCT94
CHK	M ELLIS	10OCT94
APVD	S BORTNER	10OCT94
PRODUCT SPEC	—	
APPLICATION SPEC	—	
WEIGHT	—	

TE Connectivity

NAME: TERMINAL, RING TONGUE, STRATOTHERM, DIAMOND GRIP, WIRE SIZE: 22-16 AWG

SIZE	CAGE CODE	DRAWING NO	RESTRICTED TO
A3	00779	C-321898	—

CUSTOMER DRAWING | SCALE 6:1 | SHEET 1 OF 1 | REV G5

1470-19 (3/11)