THIS DRAWING IS UNPUBLISHED. RELEASED FOR PUBLICATION - ,N/A .
© COPYRIGHT N/A By - ALL RIGHTS RESERVED.

LOC	DIST
—	—

REVISIONS

P	LTR	DESCRIPTION	DATE	DWN	APVD
	N	REVISED PER ECO-15-016251	13NOV15	KG	CD

1. THIS PLUG WILL MATE WITH ANY 27C2, SIZE 4 RECEPTACLE IN AMPLIMITE SERIES.
2. MAXIMUM WIRE INSULATION TO BE USED WITH THIS PLUG IS ø.068.
3. THIS CONNECTOR ACCEPTS (2) POWER 8, OR COAX PIN CONTACTS IN POSITIONS A1 THRU A2, PURCHASED SEPARATELY.
4. THIS CONNECTOR ACCEPTS SIZE 20 PIN SIGNAL CONTACTS IN POSITIONS 1 THRU 25, PURCHASED SEPARATELY.

5. UL/CSA DESIGNATION STAMPED IN THIS AREA, OPTIONAL.
6. STEEL PER ASTM-A-109.
7. BRASS PER MIL-C-50 AND ASTM-B-36 UNS NO. C26000.
8. CADMIUM PLATED PER QQ-P-416.
9. FINISH: GOLD PLATED PER MIL-G-45204 TYPE II, GRADE C, CLASS 1 OVER COPPER PER MIL-C-14550, CLASS IV.
10. FINISH: TIN PER ASTM-B-545, .000400 MIN THK OVER COPPER PER AMS2418 .000050 MIN THK.
11. GROUNDING INDENTS FOR 212538-4 & 5-212538-4 ONLY.
12. FINISH: ZINC PLATE PER ASTM-B-633 .000200-.000400 THK WITH SUPPLEMENTARY CHROMATE (Cr3+).

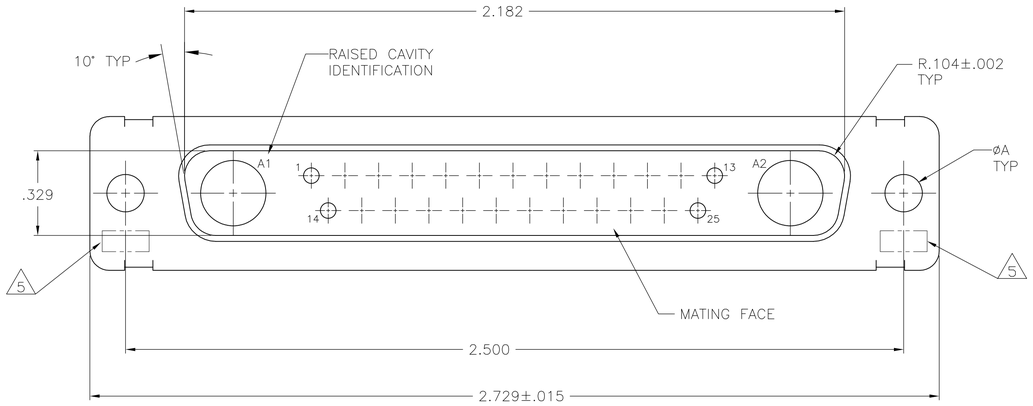

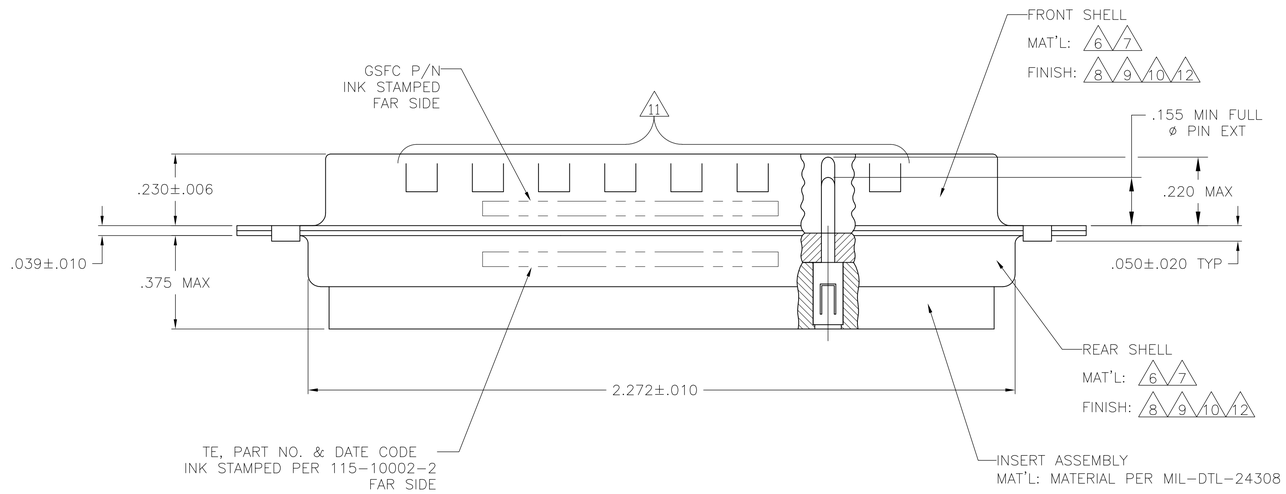

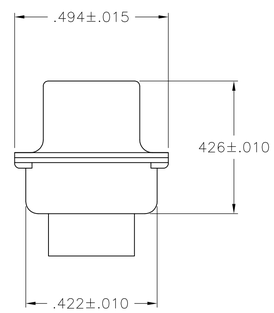

REMARKS	ØA	GSFC P/N	PART NO.
6 11 10	.120	–	5-212538-4
6 12	.120	–	5-212538-1
6 10 11	.120	–	212538-4
7 9	.154	311P405-21P-B-15	212538-3
7 9	.120	311P405-21P-B-12	212538-2
6 8	.120	–	212538-1

THIS DRAWING IS A CONTROLLED DOCUMENT.

DIMENSIONS: INCHES

TOLERANCES UNLESS OTHERWISE SPECIFIED:
0 PLC ± –
1 PLC ± –
2 PLC ± –
3 PLC ± .005[0.13]
4 PLC ± –
ANGLES ± 0°30'

MATERIAL –
FINISH –

DWN 27-May-15 MANJUNATH G M
CHK 27-May-15 CHARLES THOMAS
APVD 27-May-15 CHARLES THOMAS
PRODUCT SPEC —
APPLICATION SPEC —
WEIGHT —

TE Connectivity

NAME
PLUG ASSEMBLY
AMPLIMITE 27C2
SIZE 4, SERIES 109, COAX MIX

SIZE	CAGE CODE	DRAWING NO	RESTRICTED TO
A1	00779	C-212538	—

CUSTOMER DRAWING | SCALE 4:1 | SHEET 1 OF 1 | REV N

4805 (3/11)