19-1839; Rev 5; 7/12

SC70/µDFN, Single/Dual Low-Voltage, Low-Power µP Reset Circuits

General Description

The MAX6381–MAX6390 microprocessor (µP) supervisory circuits monitor power-supply voltages from +1.8V to +5.0V while consuming only 3µA of supply current at +1.8V. Whenever V_{CC} falls below the factory-set reset thresholds, the reset output asserts and remains asserted for a minimum reset timeout period after V_{CC} rises above the reset threshold. Reset thresholds are available from +1.58V to +4.63V, in approximately 100mV increments. Seven minimum reset timeout delays ranging from 1ms to 1200ms are available.

The MAX6381/MAX6384/MAX6387 have a push-pull active-low reset output. The MAX6382/MAX6385/MAX6388 have a push-pull active-high reset output, and the MAX6383/MAX6386/MAX6389/MAX6390 have an open-drain active-low reset output. The MAX6384/MAX6385/MAX6386 also feature a debounced manual reset input (with internal pullup resistor). The MAX6387/MAX6388/MAX6389 have an auxiliary input for monitoring a second voltage. The MAX6390 offers a manual reset input with a longer V_{CC} reset timeout period (1120ms or 1200ms) and a shorter manual reset timeout (140ms or 150ms).

The MAX6381/MAX6382/MAX6383 are available in 3-pin SC70 and 6-pin µDFN packages and the MAX6384–MAX6390 are available in 4-pin SC70 and 6-pin µDFN packages.

Applications

- Computers
- Controllers
- Intelligent Instruments
- Critical µP and µC Power Monitoring
- Portable/Battery-Powered Equipment
- Dual Voltage Systems

Pin Configurations

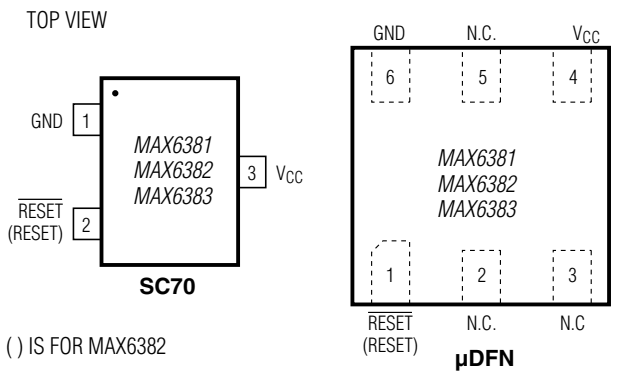

Pin Configurations continued at end of data sheet.

Features

- **Factory-Set Reset Threshold Voltages Ranging from +1.58V to +4.63V in Approximately 100mV Increments**
- **±2.5% Reset Threshold Accuracy Over Temperature (-40°C to +125°C)**
- **Seven Reset Timeout Periods Available: 1ms, 20ms, 140ms, 280ms, 560ms, 1120ms, 1200ms (min)**
- **3 Reset Output Options**
  - **Active-Low Push-Pull**
  - **Active-High Push-Pull**
  - **Active-Low Open-Drain**
- **Reset Output State Guaranteed Valid Down to V_{CC} = 1V**
- **Manual Reset Input (MAX6384/MAX6385/MAX6386)**
- **Auxiliary RESET IN (MAX6387/MAX6388/MAX6389)**
- **V_{CC} Reset Timeout (1120ms or 1200ms)/Manual Reset Timeout (140ms or 150ms) (MAX6390)**
- **Negative-Going V_{CC} Transient Immunity**
- **Low Power Consumption of 6µA at +3.6V and 3µA at +1.8V**
- **Pin Compatible with MAX809/MAX810/MAX803/MAX6326/MAX6327/MAX6328/MAX6346/MAX6347/MAX6348, and MAX6711/MAX6712/MAX6713**
- **Tiny 3-Pin/4-Pin SC70 and 6-Pin µDFN Packages**

Ordering Information

PART	TEMP RANGE	PIN-PACKAGE
MAX6381LT_ _D_+T	-40°C to +125°C	6 µDFN
MAX6381XR_ _D_+T	-40°C to +125°C	3 SC70
MAX6381XR_ _D_/V+T	-40°C to +125°C	3 SC70
MAX6382LT_ _D_+T	-40°C to +125°C	6 µDFN
MAX6382XR_ _D_+T	-40°C to +125°C	3 SC70

Note: *Insert reset threshold suffix (see Reset Threshold table) after "XR", "XS", or "LT." Insert reset timeout delay (see Reset Timeout Delay table) after "D" to complete the part number. Sample stock is generally held on standard versions only (see Standard Versions table). Standard versions have an order increment requirement of 2500 pieces. Nonstandard versions have an order increment requirement of 10,000 pieces. Contact factory for availability of nonstandard versions.*

+Denotes a lead(Pb)-free/RoHS-compliant package.
/V denotes an automotive qualified part.

Ordering Information continued at end of data sheet.
Typical Operating Circuit appears at end of data sheet.
Selector Guide appears at end of data sheet.

For pricing, delivery, and ordering information, please contact Maxim Direct at 1-888-629-4642, or visit Maxim's website at www.maxim-ic.com.

SC70/µDFN, Single/Dual Low-Voltage, Low-Power µP Reset Circuits

ABSOLUTE MAXIMUM RATINGS

V_{CC} to GND .....-0.3V to +6.0V
$\overline{RESET}$ Open-Drain Output .....-0.3V to +6.0V
$\overline{RESET}$, RESET (push-pull output) .....-0.3V to (V_{CC} + 0.3V)
$\overline{MR}$, RESET IN.....-0.3V to (V_{CC} + 0.3V)
Input Current (V_{CC}) 20mA
Output Current (all pins) 20mA

Continuous Power Dissipation (T_A = +70°C)
3-Pin SC70 (derate 2.9mW/°C above +70°C) 235mW
4-Pin SC70 (derate 3.1mW/°C above +70°C) 245mW
6-Pin µDFN (derate 2.1mW/°C above +70°C) 167.7mW
Operating Temperature Range .....-40°C to +125°C
Storage Temperature Range .....-65°C to +150°C
Lead Temperature (soldering, 10s) .....+300°C
Soldering Temperature (reflow) .....+260°C

Stresses beyond those listed under "Absolute Maximum Ratings" may cause permanent damage to the device. These are stress ratings only, and functional operation of the device at these or any other conditions beyond those indicated in the operational sections of the specifications is not implied. Exposure to absolute maximum rating conditions for extended periods may affect device reliability.

ELECTRICAL CHARACTERISTICS

(V_{CC} = full range, T_A = -40°C to +125°C, unless otherwise specified. Typical values are at T_A = +25°C.) (Note 1)

PARAMETER	SYMBOL	CONDITIONS		MIN	TYP	MAX	UNITS
Operating Voltage Range	V_{CC}			1.0		5.5	V
V_{CC} Supply Current	I_{CC}	V_{CC} = 5.5V, no load			7	13	µA
		V_{CC} = 3.6V, no load			6	11	
		V_{CC} = 2.5V, no load			4	7	
		V_{CC} = 1.8V, no load			3	6	
V_{CC} Reset Threshold (See Reset Thresholds table)	V_{TH}	T_A = +25°C		V_{TH} - 1.5%	V_{TH}	V_{TH} + 1.5%	V
		T_A = -40°C to +125°C		V_{TH} - 2.5%	V_{TH}	V_{TH} + 2.5%	
Reset Threshold Tempco	ΔV_{TH}/°C				60		ppm/°C
V_{CC} to Reset Delay		V_{CC} falling at 10mV/µs from V_{TH} + 100mV to V_{TH} - 100mV			35		µs
Reset Timeout Period MAX6381–MAX6389 (See Reset Timeout table)	t_{RP}	D1		1		2	ms
		D2		20		40	
		D3		140		280	
		D5		280		560	
		D6		560		1120	
		D4		1120		2240	
		D7		1200		2400	
Reset Timeout Period MAX6390	t_{RP}	$\overline{MR}$ timeout period	D4	140		280	ms
			D7	150		300	
		V_{CC} timeout period	D4	1120		2240	
			D7	1200		2400	
$\overline{MR}$ Input Voltage	V_{IL}	V_{TH} < 4V				0.3 x V_{CC}	V
	V_{IH}			0.7 x V_{CC}			
	V_{IL}	V_{TH} > 4V				0.8	
	V_{IH}			2.4			

ELECTRICAL CHARACTERISTICS (continued)

(V_{CC} = full range, T_A = -40°C to +125°C, unless otherwise specified. Typical values are at T_A = +25°C.) (Note 1)

PARAMETER	SYMBOL	CONDITIONS	MIN	TYP	MAX	UNITS
$\overline{MR}$ Minimum Input Pulse Width			1			µs
$\overline{MR}$ Glitch Rejection				100		ns
$\overline{MR}$ to Reset Delay				200		ns
$\overline{MR}$ Internal Pullup Resistance		MAX6381–MAX6389	32	63	100	kΩ
		MAX6390	500	1560	3000	Ω
RESET IN Input Threshold	V_{THRST}	T_A = +25°C	1.245	1.27	1.295	V
		T_A = 0°C to +85°C	1.232		1.308	
		T_A = -40°C to +125°C	1.219		1.321	
RESET IN to RESET Delay		$V_{RESETIN}$ falling at 4mV/µs from V_{THRST} + 40mV to V_{THRST} - 40mV		4.5		µs
RESET IN Input Leakage Current	$I_{RESET\ IN}$		-50	±1	+50	nA
Open-Drain $\overline{RESET}$ Output Voltage	V_{OL}	V_{CC} ≥ 4.5V, I_{SINK} = 3.2mA, reset asserted			0.4	V
		V_{CC} ≥ 2.5V, I_{SINK} = 1.2mA, reset asserted			0.3	
		V_{CC} ≥ 1.0V, I_{SINK} = 80µA, reset asserted			0.3	
Open-Drain $\overline{RESET}$ Output Leakage Current	I_{LKG}	V_{CC} > V_{TH}, $\overline{RESET}$ not asserted			1.0	µA
Push-Pull $\overline{RESET}$ Output Voltage	V_{OL}	V_{CC} ≥ 4.5V, I_{SINK} = 3.2mA, reset asserted			0.4	V
		V_{CC} ≥ 2.5V, I_{SINK} = 1.2mA, reset asserted			0.3	
		V_{CC} ≥ 1.0V, I_{SINK} = 80µA, reset asserted			0.3	
	V_{OH}	V_{CC} ≥ 4.5V, I_{SOURCE} = 800µA, reset not asserted	0.8 x V_{CC}			
		V_{CC} ≥ 2.5V, I_{SOURCE} = 500µA, reset not asserted	0.8 x V_{CC}			
Push-Pull RESET Output Voltage	V_{OH}	V_{CC} ≥ 4.5V, I_{SOURCE} = 800µA, reset asserted	0.8 x V_{CC}			V
		V_{CC} ≥ 2.5V, I_{SOURCE} = 500µA, reset asserted	0.8 x V_{CC}			
		V_{CC} ≥ 1.8V, I_{SOURCE} = 150µA, reset asserted	0.8 x V_{CC}			
		V_{CC} ≥ 1.0V, I_{SOURCE} = 1µA, reset asserted	0.8 x V_{CC}			
	V_{OL}	V_{CC} ≥ 4.5V, I_{SINK} = 3.2mA, reset not asserted			0.4	
		V_{CC} ≥ 2.5V, I_{SINK} = 1.2mA, reset not asserted			0.3	

Note 1: Specifications over temperature are guaranteed by design, not production tested.

SC70/µDFN, Single/Dual Low-Voltage, Low-Power µP Reset Circuits

Typical Operating Characteristics

(T_A = +25°C, unless otherwise noted.)

SUPPLY CURRENT vs. TEMPERATURE (NO LOAD)

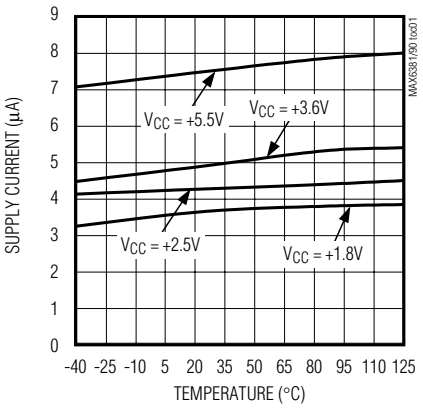

POWER-DOWN RESET DELAY vs. TEMPERATURE

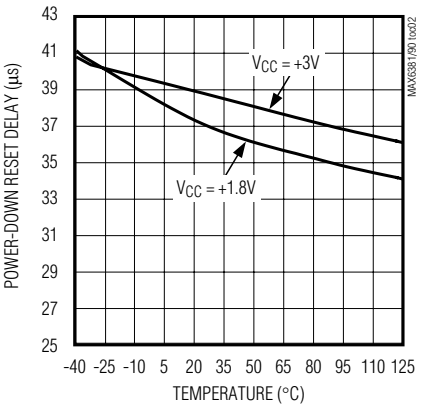

NORMALIZED POWER-UP RESET TIMEOUT vs. TEMPERATURE

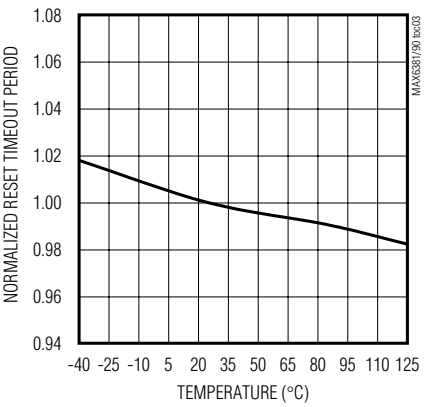

NORMALIZED RESET THRESHOLD vs. TEMPERATURE

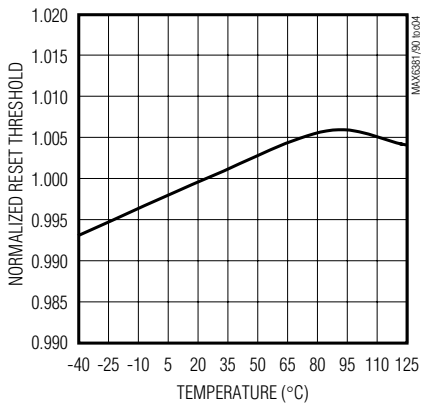

OUTPUT-VOLTAGE LOW vs. SINK CURRENT

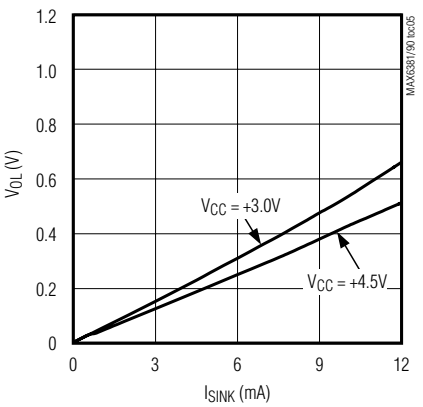

OUTPUT-VOLTAGE HIGH vs. SOURCE CURRENT

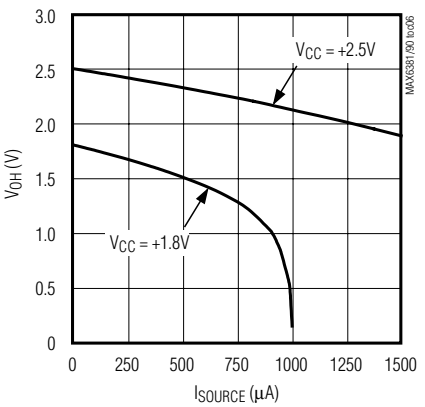

MAXIMUM TRANSIENT DURATION vs. RESET COMPARATOR OVERDRIVE

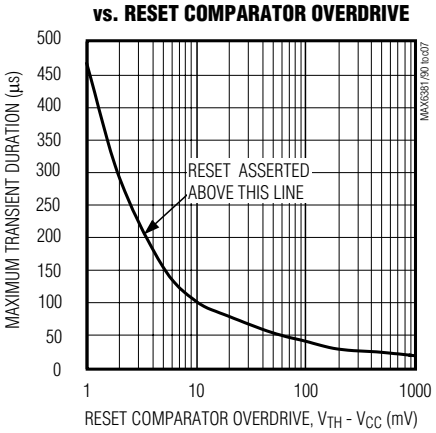

RESET IN TO RESET DELAY vs. TEMPERATURE

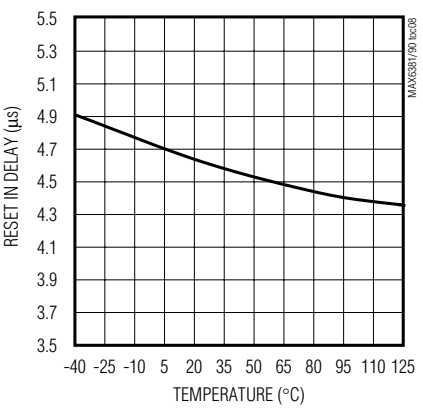

Pin Description

PIN							NAME	FUNCTION
µDFN	3-PIN SC70		4-PIN SC70					
	MAX6381/ MAX6383	MAX6382	MAX6384/ MAX6386/ MAX6390	MAX6385	MAX6387/ MAX689	MAX6388		
1 (MAX6382/ MAX6385/ MAX6388)		2	—	2	—	2	RESET	Active-High Push-Pull Reset Output. RESET changes from low to high when any monitored voltage (V_{CC} or $V_{RESETIN}$) drops below the reset threshold or $\overline{MR}$ is pulled low. RESET remains high for the reset timeout period after monitored voltages exceed the reset thresholds or $\overline{MR}$ is released.
1 (MAX6381/ MAX6383/ MAX6384/ MAX6386/ MAX6387/ MAX6390)	2	—	2	—	2	—	$\overline{RESET}$	Active-Low Open-Drain/Push-Pull Reset Output. $\overline{RESET}$ changes from high to low when any monitored voltage (V_{CC} or $V_{RESETIN}$) drops below the reset threshold or $\overline{MR}$ is pulled low. $\overline{RESET}$ remains low for the reset timeout period after the monitored voltages exceed the reset thresholds or $\overline{MR}$ is released. Open-drain requires an external pullup resistor.
2, 3, 5 (MAX6381/ MAX6382/ MAX6383)	—	—	—	—	—	—	N.C.	No Connection. Not Internally connected.
2, 5 (MAX6384–MAX6390)								
3 (MAX6384/ MAX6385/ MAX6386/ MAX6390)	—	—	3	3	—	—	$\overline{MR}$	Active-Low Manual Reset Input. Drive low to force a reset. Reset remains active as long as $\overline{MR}$ is low and for the reset timeout period after $\overline{MR}$ is released. Leave unconnected or connect to V_{CC} if unused. $\overline{MR}$ has an internal 63kΩ (1.56kΩ for MAX6390) pullup resistor to V_{CC}.
3 (MAX6387/ MAX6388/ MAX6389)	—	—	—	—	3	3	RESET IN	Auxiliary Reset Input. High-impedance input to the auxiliary reset comparator. Connect RESET IN to the center point of an external resistor voltage-divider network to set the reset threshold voltage. Reset asserts when either V_{CC} or RESET IN falls below its threshold voltage.
4 (MAX6381–MAX6390)	3	3	4	4	4	4	V_{CC}	Supply Voltage for the device and input for fixed V_{CC} reset threshold monitor.
6 (MAX6381–MAX6390)	1	1	1	1	1	1	GND	Ground

SC70/µDFN, Single/Dual Low-Voltage, Low-Power µP Reset Circuits

Detailed Description

RESET Output

A µP reset input starts the µP in a known state. These µP supervisory circuits assert reset to prevent code execution errors during power-up, power-down, or brownout conditions.

Reset asserts when V_{CC} is below the reset threshold; once V_{CC} exceeds the reset threshold, an internal timer keeps the reset output asserted for the reset timeout period. After this interval, reset output deasserts. Reset output is guaranteed to be in the correct logic state for $V_{CC} \geq 1V$.

Manual Reset Input (MAX6384/MAX6385/MAX6386/MAX6390)

Many µP-based products require manual reset capability, allowing the operator, a test technician, or external logic circuitry to initiate a reset. A logic low on $\overline{MR}$ asserts reset. Reset remains asserted while $\overline{MR}$ is low, and for the reset active timeout period (t_{RP}) after $\overline{MR}$ returns high. This input has an internal 63kΩ pullup resistor (1.56kΩ for MAX6390), so it can be left unconnected if it is not used. $\overline{MR}$ can be driven with TTL or CMOS logic levels, or with open-drain/collector outputs. Connect a normally open momentary switch from $\overline{MR}$ to GND to create a manual-reset function; external debounce circuitry is not required. If $\overline{MR}$ is driven from long cables or if the device is used in a noisy environment, connecting a 0.1µF capacitor from $\overline{MR}$ to GND provides additional noise immunity.

RESET IN Comparator (MAX6387/MAX6388/MAX6389)

RESET IN is compared to an internal +1.27V reference. If the voltage at RESET IN is less than 1.27V, reset asserts. Use the RESET IN comparator as a user-adjustable reset detector or as a secondary power-supply monitor by implementing a resistor-divider at RESET IN (shown in Figure 1). Reset asserts when either V_{CC} or RESET IN falls below its respective threshold voltage. Use the following equation to set the threshold:

$$V_{INTH} = V_{THRST} (R1/R2 + 1)$$

where V_{THRST} = +1.27V. To simplify the resistor selection, choose a value of R2 and calculate R1:

$$R1 = R2 [(V_{INTH}/V_{THRST}) - 1]$$

Since the input current at RESET IN is 50nA (max), large values can be used for R2 with no significant loss in accuracy.

Reset Thresholds (-40°C to +125°C)

SUFFIX	V_{TH} (min)	V_{TH} (nom)	V_{TH} (max)
46	4.51	4.63	4.74
45	4.39	4.50	4.61
44	4.27	4.38	4.48
43	4.19	4.30	4.41
42	4.10	4.20	4.31
41	4.00	4.10	4.20
40	3.90	4.00	4.10
39	3.80	3.90	4.00
38	3.71	3.80	3.90
37	3.61	3.70	3.79
36	3.51	3.60	3.69
35	3.41	3.50	3.59
34	3.32	3.40	3.49
33	3.22	3.30	3.38
32	3.12	3.20	3.28
31	3.00	3.08	3.15
30	2.93	3.00	3.08
29	2.85	2.93	3.00
28	2.73	2.80	2.87
27	2.63	2.70	2.77
26	2.56	2.63	2.69
25	2.44	2.50	2.56
24	2.34	2.40	2.46
23	2.26	2.31	2.37
22	2.13	2.19	2.24
21	2.05	2.10	2.15
20	1.95	2.00	2.05
19	1.85	1.90	1.95
18	1.76	1.80	1.85
17	1.62	1.67	1.71
16	1.54	1.58	1.61

Applications Information

Negative-Going V_{CC} Transients

In addition to issuing a reset to the µP during power-up, power-down, and brownout conditions, the MAX6381–MAX6390 are relatively immune to short duration negative-going V_{CC} transients (glitches).

The *Typical Operating Characteristics* section shows the Maximum Transient Durations vs. Reset Comparator Overdrive, for which the MAX6381–MAX6390 do not generate a reset pulse. This graph was generated using

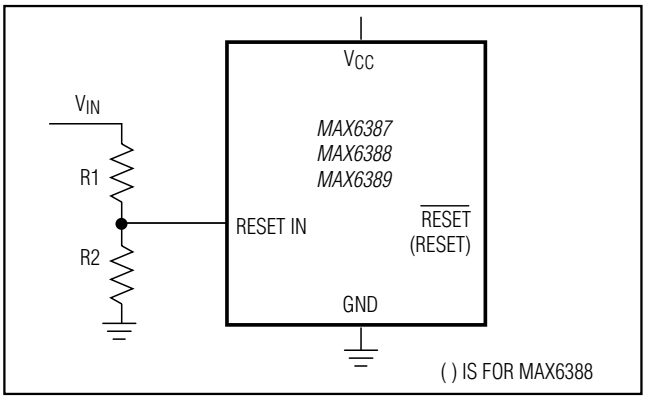

Figure 1. RESET IN Configuration

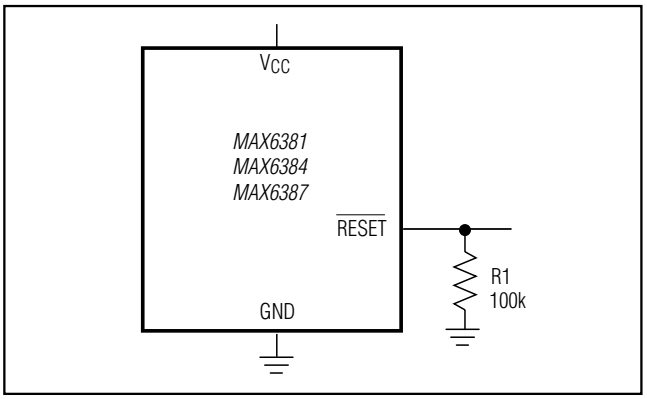

Figure 2. RESET Valid to V_{CC} = Ground Circuit

Reset Timeout Delay

SUFFIX	MIN
D1	1ms
D2	20ms
D3	140ms
D5	280ms
D6	560ms
D4	1120ms
D7	1200ms
MAX6390_ _D4	1120/140ms*
MAX6390_ _D7	1200/150ms*

**The MAX6390 has a 1120ms or 1200ms $\overline{RESET}$ timeout and a 140ms or 150ms manual reset timeout.*

a negative-going pulse applied to V_{CC}, starting above the actual reset threshold and ending below it by the magnitude indicated (reset comparator overdrive). The graph indicates the typical maximum pulse width a negative-going V_{CC} transient may have without causing a reset pulse to be issued. As the magnitude of the transient increases (goes farther below the reset threshold), the maximum allowable pulse width decreases. A 0.1µF capacitor mounted as close as possible to V_{CC} provides additional transient immunity.

Ensuring a Valid RESET Output Down to V_{CC} = 0V

The MAX6381–MAX6390 are guaranteed to operate properly down to V_{CC} = 1V. In applications that require valid reset levels down to V_{CC} = 0V, a pulldown resistor to active-low outputs (push/pull only, Figure 2) and a pullup resistor to active-high outputs (push/pull only) will ensure that the reset line is valid while the reset output can no longer sink or source current. This scheme does not work with the open-drain outputs of the MAX6383/MAX6386/MAX6389/MAX6390. The resistor value used is not critical, but it must be small enough not to load the reset output when V_{CC} is above the reset threshold. For most applications, 100kΩ is adequate.

Standard Versions

PART	RESET THRESHOLD	RESET TIMEOUT
MAX638_	46	D3
	44	
	31	
	29	
	26	
	23	
	22	
	17	
	16	
MAX6390	46	D4
	44	
	31	
	29	
	26	
	23	
	22	
	17	
	16	

SC70/µDFN, Single/Dual Low-Voltage, Low-Power µP Reset Circuits

Selector Guide

PART NUMBER	PUSH-PULL ACTIVE-LOW	PUSH-PULL ACTIVE-HIGH	OPEN-DRAIN ACTIVE-LOW	MANUAL RESET INPUT $\overline{MR}$	RESET IN
MAX6381	X				
MAX6382		X			
MAX6383			X		
MAX6384	X			X	
MAX6385		X		X	
MAX6386			X	X	
MAX6390*			X	X	
MAX6387	X				X
MAX6388		X			X
MAX6389			X		X

The MAX6390 offers a V_{CC} reset timeout of 1120ms or 1200ms (min) and a manual reset timeout of 140ms or 150ms (min).

Typical Operating Circuit

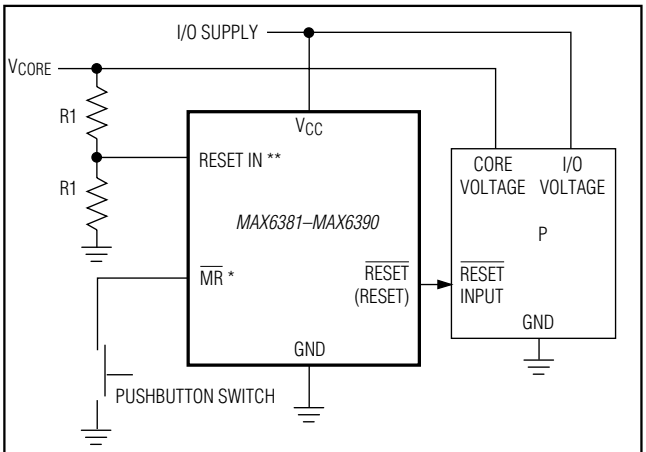

$\overline{MR}$ is for MAX6384/MAX6385/MAX6386/MAX6390
***RESET IN is for MAX6387/MAX6388/MAX6389*
( ) are for MAX6382/MAX6385/MAX6388

Ordering Information (continued)

PART	TEMP RANGE	PIN-PACKAGE
MAX6383LT_ _D_+T	-40°C to +125°C	6 µDFN
MAX6383XR_ _D_+T	-40°C to +125°C	3 SC70
MAX6384LT_ _D_+T	-40°C to +125°C	6 µDFN
MAX6384XS_ _D_+T	-40°C to +125°C	4 SC70
MAX6385LT_ _D_+T	-40°C to +125°C	6 µDFN
MAX6385XS_ _D_+T	-40°C to +125°C	4 SC70
MAX6386LT_ _D_+T	-40°C to +125°C	6 µDFN
MAX6386XS_ _D_+T	-40°C to +125°C	4 SC70
MAX6387LT_ _D_+T	-40°C to +125°C	6 µDFN
MAX6387XS_ _D_+T	-40°C to +125°C	4 SC70
MAX6388LT_ _D_+T	-40°C to +125°C	6 µDFN
MAX6388XS_ _D_+T	-40°C to +125°C	4 SC70
MAX6389LT_ _D_+T	-40°C to +125°C	6 µDFN
MAX6389XS_ _D_+T	-40°C to +125°C	4 SC70
MAX6390LT_ _D_+T	-40°C to +125°C	6 µDFN
MAX6390XS_ _D_+T*	-40°C to +125°C	4 SC70

Note: *Insert reset threshold suffix (see Reset Threshold table) after "XR", "XS", or "LT." Insert reset timeout delay (see Reset Timeout Delay table) after "D" to complete the part number. Sample stock is generally held on standard versions only (see Standard Versions table). Standard versions have an order increment requirement of 2500 pieces. Nonstandard versions have an order increment requirement of 10,000 pieces. Contact factory for availability of nonstandard versions.*

**MAX6390 is available with D4 or D7 timing only.*

+Denotes a lead(Pb)-free/RoHS-compliant package.

Pin Configurations (continued)

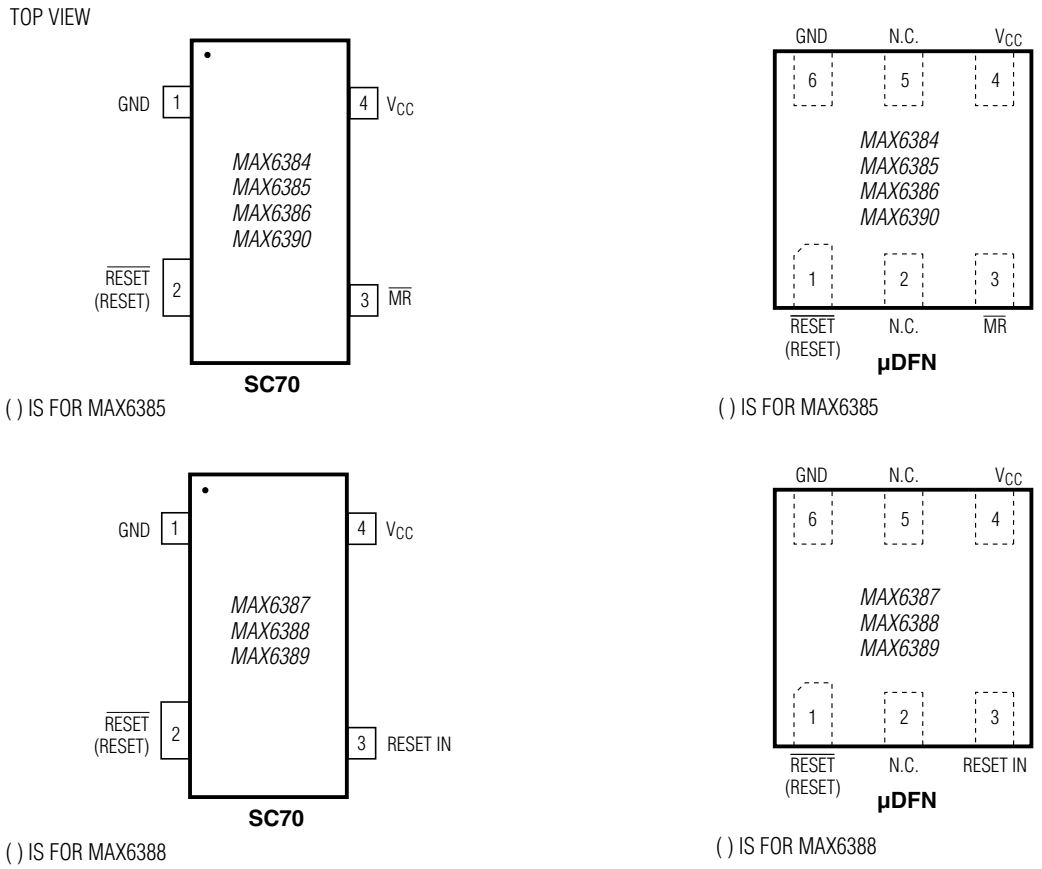

Chip Information

PROCESS: BiCMOS

Package Information

For the latest package outline information and land patterns, go to **www.maxim-ic.com/packages**. Note that a "+", "#", or "-" in the package code indicates RoHS status only. Package drawings may show a different suffix character, but the drawing pertains to the package regardless of RoHS status.

PACKAGE TYPE	PACKAGE CODE	OUTLINE NO.	LAND PATTERN NO.
3 SC70	X3+2	21-0075	90-0208
4 SC70	X4+1	21-0098	90-0187
6 µDFN	L611+1	21-0147	90-0080

SC70/µDFN, Single/Dual Low-Voltage, Low-Power µP Reset Circuits

Revision History

REVISION NUMBER	REVISION DATE	DESCRIPTION	PAGES CHANGED
0	10/00	Initial release	—
3	12/05	Added lead-free notation to *Ordering Information*.	1, 8
4	4/07	Added µDFN package to data sheet.	1, 2, 5, 7–13
5	7/12	Added automotive package to *Ordering Information*.	1

Maxim cannot assume responsibility for use of any circuitry other than circuitry entirely embodied in a Maxim product. No circuit patent licenses are implied. Maxim reserves the right to change the circuitry and specifications without notice at any time. The parametric values (min and max limits) shown in the Electrical. Characteristics table are guaranteed. Other parametric values quoted in this data sheet are provided for guidance.

© 2012 Maxim Integrated Products Maxim is a registered trademark of Maxim Integrated Products, Inc.

Mouser Electronics

Authorized Distributor

Click to View Pricing, Inventory, Delivery & Lifecycle Information:

Maxim Integrated:

MAX6381XR23D3+T MAX6383XR42D7+T MAX6386XS21D3+T MAX6387LT17D3+T MAX6383LT46D2+T
MAX6384LT30D5+T MAX6383LT27D6+T MAX6389XS25D3+T MAX6384XS43D7+T MAX6381XR23D7+T
MAX6381XR25D6+T MAX6385LT32D2+T MAX6382XR26D7+T MAX6388XS44D6+T MAX6387LT16D3+T
MAX6384XS33D7+T MAX6382XR37D7+T MAX6382LT28D7+T MAX6385LT35D1+T MAX6386XS27D5+T
MAX6386XS29D6+T MAX6387XS34D5+T MAX6388LT36D1+T MAX6386LT37D2+T MAX6389LT32D3+T
MAX6383XR16D5+T MAX6387LT36D3+T MAX6383LT16D4+T MAX6386LT40D1+T MAX6381LT22D1+T
MAX6381LT31D1+T MAX6381LT17D1+T MAX6389LT24D5+T MAX6381LT27D1+T MAX6387LT45D1+T
MAX6382XR29D7+T MAX6381LT25D4+T MAX6382XR28D6+T MAX6387XS26D4+T MAX6383XR16D1+T
MAX6381LT16D1+T MAX6381LT16D2+T MAX6381LT16D3+T MAX6381LT16D4+T MAX6381LT16D5+T
MAX6381LT16D6+T MAX6381LT16D7+T MAX6381LT17D2+T MAX6381LT17D3+T MAX6381LT17D4+T
MAX6381LT17D5+T MAX6381LT17D6+T MAX6381LT17D7+T MAX6381LT18D1+T MAX6381LT18D2+T
MAX6381LT18D3+T MAX6381LT18D4+T MAX6381LT18D5+T MAX6381LT18D6+T MAX6381LT18D7+T
MAX6381LT19D1+T MAX6381LT19D2+T MAX6381LT19D3+T MAX6381LT19D4+T MAX6381LT19D5+T
MAX6381LT19D6+T MAX6381LT19D7+T MAX6381LT20D1+T MAX6381LT20D2+T MAX6381LT20D3+T
MAX6381LT20D4+T MAX6381LT20D5+T MAX6381LT20D6+T MAX6381LT20D7+T MAX6381LT21D1+T
MAX6381LT21D2+T MAX6381LT21D3+T MAX6381LT21D4+T MAX6381LT21D5+T MAX6381LT21D6+T
MAX6381LT21D7+T MAX6381LT22D2+T MAX6381LT22D3+T MAX6381LT22D4+T MAX6381LT22D5+T
MAX6381LT22D6+T MAX6381LT22D7+T MAX6381LT23D1+T MAX6381LT23D2+T MAX6381LT23D3+T
MAX6381LT23D4+T MAX6381LT23D5+T MAX6381LT23D6+T MAX6381LT23D7+T MAX6381LT24D1+T
MAX6381LT24D2+T MAX6381LT24D3+T MAX6381LT24D4+T MAX6381LT24D5+T MAX6381LT24D6+T