THIS COPY IS PROVIDED ON A RESTRICTED BASIS AND IS NOT TO BE USED IN ANY WAY DETRIMENTAL TO THE INTERESTS OF PANDUIT CORP.

PART NUMBER	STUD SIZE	WIRE RANGE mm^2 (AWG)	DIMENSIONS mm				
			A ±(.80/.03)	W ±(.25/.01)	C ±(.38/.01)	M ±(.50/.02)	H ±(.50/.02)
PMNF1-3R-3K	M3	0,5-1,5 (22-18)	19,3 (.76)	5,8 (.23)	5,2 (.20)	16,8 (.66)	3,3 (.13)
PMNF1-35R-3K	M3,5	0,5-1,5 (22-18)	19,3 (.76)	5,8 (.23)	5,2 (.20)	16,8 (.66)	3,8 (.15)
PMNF1-4R-3K	M4	0,5-1,5 (22-18)	21,9 (.86)	7,9 (.31)	6,4 (.25)	17,9 (.71)	4,6 (.18)
PMNF1-5R-3K	M5	0,5-1,5 (22-18)	22,4 (.88)	8,9 (.35)	6,4 (.25)	17,9 (.71)	5,3 (.21)
PMNF1-6R-3K	M6	0,5-1,5 (22-18)	26,7 (1.05)	10,9 (.43)	9,7 (.38)	21,3 (.84)	6,9 (.27)

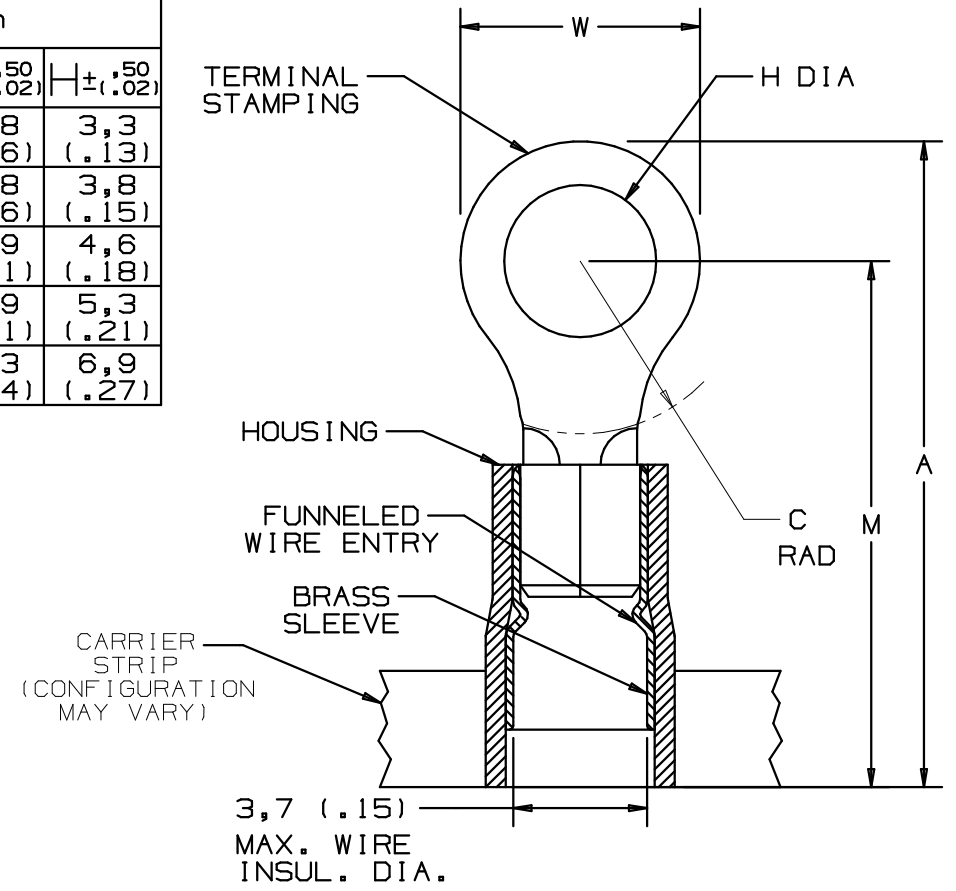

NOTES:

1. USED FOR:
   A. 600V MAX. BUILDING WIRE
      1000V MAX. IN SIGNS, FIXTURES, AND LUMINAIRES
   B. 105°C (221°F) MAX. TEMP. RATING OF INSUL. MAT'L.
   C. SOLID OR STRANDED COPPER WIRE
2. PACKAGE QTY:
   3K = 3000 PCS. ON CONTINUOUSLY MOLDED CARRIER STRIP
3. MATERIAL:
   A. STAMPING: ,81 (.03)THK. COPPER, TIN PLATED
   B. SLEEVE: BRASS, TIN PLATED
   C. HOUSING: TYPE 6/6 NYLON, RED
4. WIRE STRIP LENGTH: $6{,}4^{+,8}_{-0}$ ($1/4^{+1/32}_{-0}$)
5. DIMENSIONS IN BRACKETS ARE IN INCHES OR AWG
6. UL LISTED AND CSA CERTIFIED WITH COPPER 22-18AWG WIRE ONLY

		PANDUIT PRESS					
		CP-851 *DISCONTINUED*	CP-860 *DISCONTINUED*	CP-861	CP-862	CP-871 *60HZ*	CP-871/E *50HZ*
APPLICATORS	CA-800		X	X			
	CA-800EZ	X				X	X
	CA9				X	X	X

LISTED 587H E52164

CERTIFIED LR31212

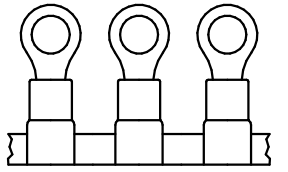

A41601_01

REV	DATE	BY	CHK	DESCRIPTION	ECN #	CUST	PM
01	3/06	DAW	DAW	ADDED PMNF1-35R-3K, ADDED PANDUIT PRESS AND APPLICATOR CHART	TR00083		
00	9/97	TM		RELEASED			

PANDUIT CORP. TINLEY PARK, ILLINOIS

0,5-1,5 mm^2 METRIC CONTINUOUSLY MOLDED, NYLON INSULATED, FUNNEL ENTRY RING TERMINAL

DRAWN BY	CHK'D	SCALE	DRAWING NO.
TSMA		NONE	A41601