THIS COPY IS PROVIDED ON A RESTRICTED BASIS AND IS NOT TO BE USED IN ANY WAY DETRIMENTAL TO THE INTERESTS OF PANDUIT CORP.

TABLE 1			
PART NUMBER	DESCRIPTION	MAX. NO. LOCKS.	STANDARD PKG.
PSL-1	HASP WITH 1.0" (25 mm) DIA. JAW AND OVERLAPPING TABS	6	12
PSL-1.5	HASP WITH 1.5" (38 mm) DIA. JAW AND OVERLAPPING TABS	6	12
PSL-1A	HASP WITH 1.0" (25 mm) DIA. JAW	6	12
PSL-1.5A	HASP WITH 1.5" (38 mm) DIA. JAW	6	12

7

TABLE 2				
P/N	"A"	"B" OVERALL	"C"	"D" DIA.
PSL-1	.375 +/-.063 [9.5 +/- 1.6]	4.50 +/-.12 [114.3 +/-3.1]	1.00 +/-.04 [25.4 +/-1.0]	1.50 +/-.04 [38.1 +/-1.0]
PSL-1.5		5.05 +/-.12 [128.3 +/-3.1]	1.50 +/-.04 [38.1 +/-1.0]	2.12 +/-.04 [53.8 +/-1.0]
PSL-1A		4.40+/-.12 [111.8 +/-3.1]	1.00 +/-.04 [25.4 +/-1.0]	1.50 +/-.04 [38.1 +/-1.0]
PSL-1.5 A		4.95 +/-.12 [125.7 +/-3.1]	1.50 +/-.04 [38.1 +/-1.0]	2.12 +/-.04 [53.8 +/-1.0]

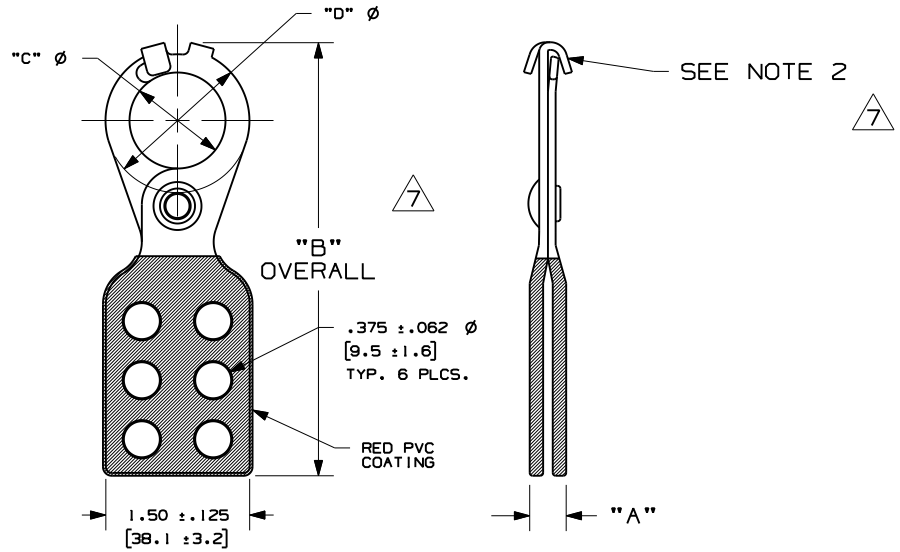

7

NOTES:
1. DIMENSIONS SHOWN IN BRACKETS ARE IN MILLIMETERS.
2. PSL-1A AND PSL1.5A DO NOT HAVE TABS
3. OPERATING TEMPERATURE: -40°C(-40°F) TO 60°C(140°F)

REV	DATE	BY	CHK	DESCRIPTION	ECN - R	CUST	SUP
7	7/7/11	JHAC	JHAC	ADDED OPERATING TEMPERATURE AND MORE DETAIL TO TITLE CHANGED MATERIAL DESCRIPTION, REMOVED ADDITIONAL DIMENSIONAL INFORMATION AND REMOVED VIEW 1 AND VIEW 2	6451 R		
6	7/21/09	RVU		.375 +/-.062Ø WAS .375 +/-.125Ø. C1018 WAS C108. .083/.079 WAS .080/.079. ADD "TABLE 1 & TABLE 2" ONLY. TOL: +/-.04 [+/- 1.01 WAS +/- .12 [+/- 3.1] FOR ALL OF COLUMN "F".	5797 R		
5	7/15/09	RVU		VOID			
4	10/20/08	RVU	LDG	CHANGE FORMAT 'B' TO 'A'. ADDED NEW COLUMNS OF "G" DIA., "H" R., VIEW 2 AND REVISED NOTES 2.	5571 R		
3	7-27-06	RVU	DWY	ADD TABLE "E" AND "F".	4583 R		
2	3-29-05	RVU	DWY	ADDED SIDE VIEW, VIEW 1, AND DIMENSIONS "A", "B", "C" AND "D".	3840 R		
1	3-25-03	RVU	DWY	DIMENSION 1.50 ±.125, 5.00 ±.125, & TOLERANCE ADDED. MISC. REVISIONS.	3207 R		
R	9-23-99	RVU	DWY	DRAWING RELEASE	1438 R		

CAD FILENAME/LAYERS: 100318MU_DC_C10099/01H

PANDUIT CORP. TINLEY PARK, ILLINOIS

7 SAFETY LOCKOUT HASP - PSL-1(A) AND PSL1.5(A)

UNLESS OTHERWISE SPECIFIED, DIMENSIONAL TOLERANCES ARE:
(.X) ± (.XXX) ±
(.XX) ± ANGLES ±

UNLESS OTHERWISE SPECIFIED, ALL DIMENSIONS ARE GIVEN IN INCHES, THIRD ANGLE PROJECTION.

DRAWN BY: RVU
DATE: 9-23-99
CHK'D:

MAT'L: 7 ZINC PLATED STEEL WITH RED PVC COATING

SCALE: NTS
DRAWING NO.: C10099
DWG SIZE: A