THIS DRAWING IS UNPUBLISHED. RELEASED FOR PUBLICATION -,- .
© COPYRIGHT - By - ALL RIGHTS RESERVED.

LOC	DIST
AD	00

REVISIONS

P	LTR	DESCRIPTION	DATE	DWN	APVD
	F3	REVISED PER ECO-12-022192	28DEC12	HMR	PO

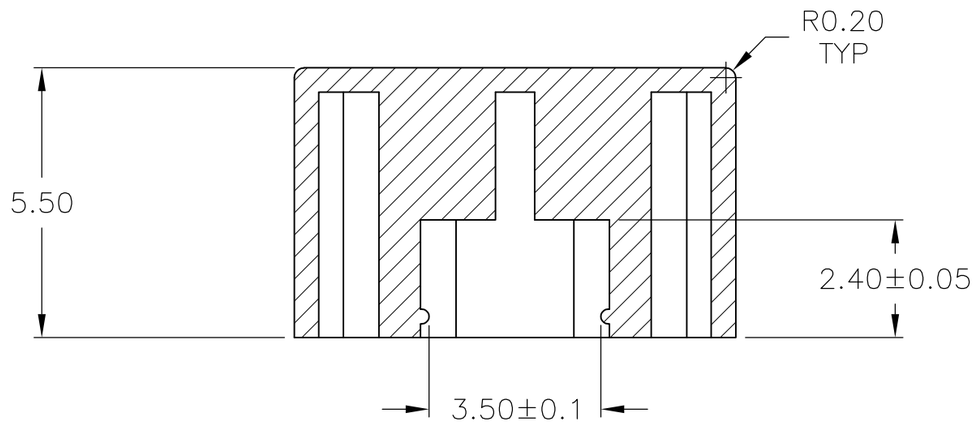

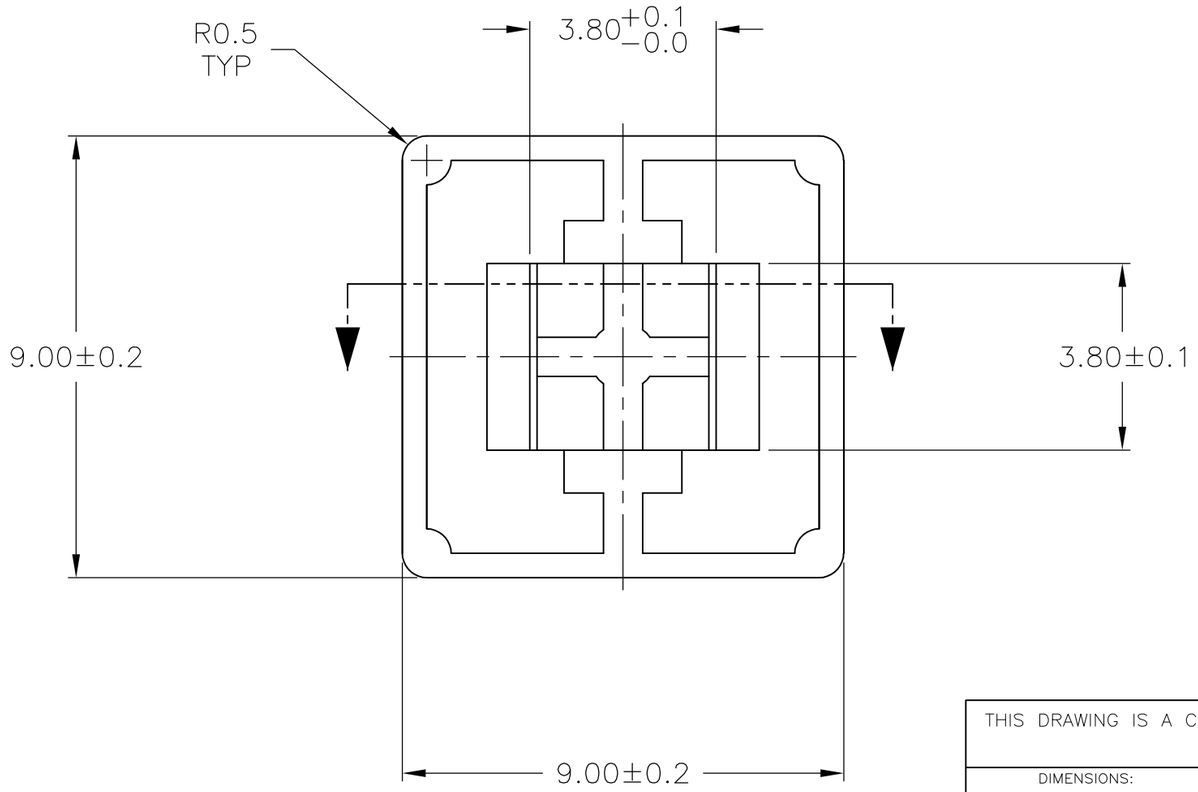

1 KEYCAP MUST WITHSTAND WAVE SOLDER PREHEAT TEMPERATURES OF 180°F.

2 OBSOLETE PARTS: OBSOLETE CIS STREAMLINING PER D.RENAUD/D.SINISI

COLOR	PART NUMBER
YELLOW	1571384-7
RED (2 OBSOLETE)	~~1571384-6~~
VIOLET	1571384-5
BLACK	1571384-4
BLUE	1571384-3
ORANGE	1571384-2
GREEN	1571384-1

THIS DRAWING IS A CONTROLLED DOCUMENT.

DIMENSIONS: mm

TOLERANCES UNLESS OTHERWISE SPECIFIED:
0 PLC ± -
1 PLC ± -
2 PLC ± 0.30
3 PLC ± -
4 PLC ± -
ANGLES ± -

MATERIAL: ABS

FINISH: -

DWN R BROWN 29SEP03
CHK M SARVER 29SEP03
APVD M SARVER 29SEP03
PRODUCT SPEC —
APPLICATION SPEC —
WEIGHT —

TE Connectivity

NAME: KEY CAP

SIZE	CAGE CODE	DRAWING NO	RESTRICTED TO
A3	00779	C-1571384	—

CUSTOMER DRAWING | SCALE 8:1 | SHEET 1 OF 1 | REV F3

1470-19 (3/11)