THIS DRAWING IS UNPUBLISHED. RELEASED FOR PUBLICATION -,- .
© COPYRIGHT - BY TYCO ELECTRONICS CORPORATION. ALL RIGHTS RESERVED.

LOC	DIST
GP	00

REVISIONS

P	LTR	DESCRIPTION	DATE	DWN	APVD
	B	REVISED PER EC 0S13-0347-05	21MAR06	LB	SB

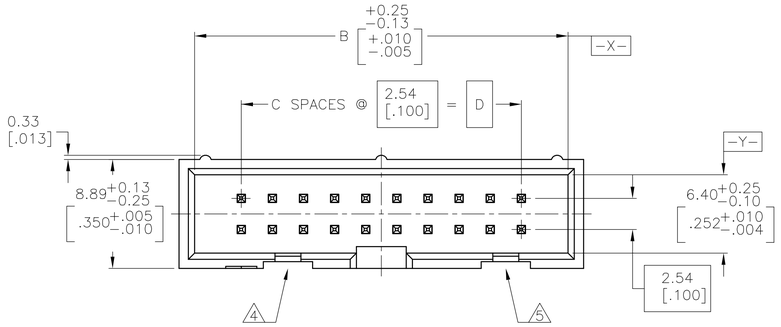

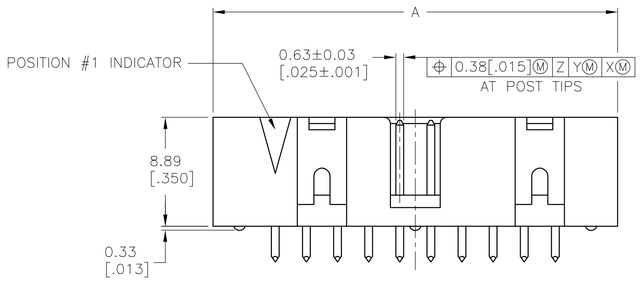

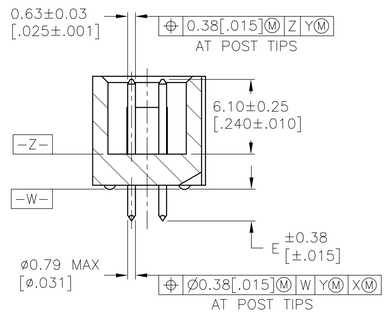

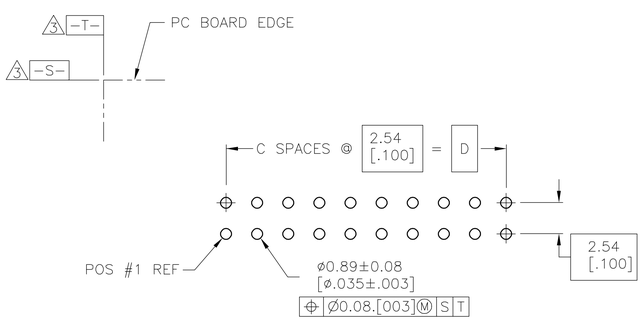

RECOMMENDED PC BOARD LAYOUT
(VIEWED FROM CONNECTOR SIDE)

1. HOUSING: PBT, UL94V-0, COLOR BLUE.
   POSTS: PHOSPHOR BRONZE.
2. POSTS: 0.00076[.000030] MIN GOLD ON MATING AREA, 0.00254[.000100] MIN TIN-LEAD ON SOLDER END, ALL OVER 0.00127[.000050] MIN NICKEL ON ENTIRE POST.
3. DATUMS S & T TO BE ESTABLISHED BY CUSTOMER.
4. NO KEYING SLOT ON THIS END FOR 6, 8, 10, 12 & 14 POSITION ASSEMBLIES.
5. NO KEYING SLOT ON THIS END FOR 6, 8 & 10 POSITION ASSEMBLIES.

	E	D	C	B	A	NO OF POS	PART NUMBER
	4.19 [.165]	78.74 [3.100]	31	86.36 [3.400]	88.90 [3.500]	64	4-1437046-7
	2.59 [.102]	78.74 [3.100]	31	86.36 [3.400]	88.90 [3.500]	64	4-1437046-6
	4.19 [.165]	73.66 [2.900]	29	81.28 [3.200]	83.82 [3.300]	60	6-1437051-7
OBSOLETE	2.59 [.102]	73.66 [2.900]	29	81.28 [3.200]	83.82 [3.300]	60	3-1437046-4
OBSOLETE	4.19 [.165]	60.96 [2.400]	24	68.58 [2.700]	71.12 [2.800]	50	2-1437046-1
	2.59 [.102]	60.96 [2.400]	24	68.58 [2.700]	71.12 [2.800]	50	1-1437046-5
	2.59 [.102]	53.34 [2.100]	21	60.96 [2.400]	63.50 [2.500]	44	1437046-2
OBSOLETE	4.19 [.165]	48.26 [1.900]	19	55.88 [2.200]	58.42 [2.300]	40	9-1437045-2
	2.59 [.102]	48.26 [1.900]	19	55.88 [2.200]	58.42 [2.300]	40	8-1437045-3
OBSOLETE	4.19 [.165]	43.18 [1.700]	17	50.80 [2.000]	53.34 [2.100]	36	6-1437045-9
	2.59 [.102]	43.18 [1.700]	17	50.80 [2.000]	53.34 [2.100]	36	6-1437045-7
	4.19 [.165]	40.64 [1.600]	16	48.26 [1.900]	50.80 [2.000]	34	5-1437045-9
	2.59 [.102]	40.64 [1.600]	16	48.26 [1.900]	50.80 [2.000]	34	5-1437045-4
	2.59 [.102]	35.56 [1.400]	14	43.18 [1.700]	45.72 [1.800]	30	4-1437045-2
	4.19 [.165]	30.48 [1.200]	12	38.10 [1.500]	40.64 [1.600]	26	3-1437045-6
	2.59 [.102]	30.48 [1.200]	12	38.10 [1.500]	40.64 [1.600]	26	3-1437045-2
OBSOLETE	4.19 [.165]	27.94 [1.100]	11	35.56 [1.400]	38.10 [1.500]	24	2-1437045-1
	2.59 [.102]	27.94 [1.100]	11	35.56 [1.400]	38.10 [1.500]	24	1-1437045-9
	4.19 [.165]	22.86 [.900]	9	30.48 [1.200]	33.02 [1.300]	20	1437045-9
	2.59 [.102]	22.86 [.900]	9	30.48 [1.200]	33.02 [1.300]	20	1437045-2
	4.19 [.165]	17.78 [.700]	7	25.40 [1.000]	27.94 [1.100]	16	8-1437044-7
	2.59 [.102]	17.78 [.700]	7	25.40 [1.000]	27.94 [1.100]	16	8-1437044-0
	4.19 [.165]	15.24 [.600]	6	22.86 [.900]	25.40 [1.000]	14	6-1437044-6
	2.59 [.102]	15.24 [.600]	6	22.86 [.900]	25.40 [1.000]	14	5-1437044-9
	2.59 [.102]	12.70 [.500]	5	20.32 [.800]	22.86 [.900]	12	5-1437044-2
	4.19 [.165]	10.16 [.400]	4	17.78 [.700]	20.32 [.800]	10	4-1437044-6
	2.59 [.102]	10.16 [.400]	4	17.78 [.700]	20.32 [.800]	10	4-1437044-3
OBSOLETE	2.59 [.102]	7.62 [.300]	3	15.24 [.600]	17.78 [.700]	8	3-1437044-4
	4.19 [.165]	5.08 [.200]	2	12.70 [.500]	15.24 [.600]	6	3-1437044-0
	2.59 [.102]	5.08 [.200]	2	12.70 [.500]	15.24 [.600]	6	2-1437044-7

COPYRIGHT 2005
TYCO ELECTRONICS CORP
ALL RIGHTS RESERVED

THIS DRAWING IS A CONTROLLED DOCUMENT.

DIMENSIONS: MM[INCHES]

TOLERANCES UNLESS OTHERWISE SPECIFIED:
0 PLC ± –
1 PLC ± –
2 PLC ± –
3 PLC ± 0.13[.005]
4 PLC ± –
ANGLES ± –

MATERIAL 1
FINISH 2

DWN	J.GERACE	11JAN05
CHK	S.BOLASH	11JAN05
APVD	M.WALMSLEY	11JAN05

PRODUCT SPEC —
APPLICATION SPEC —
WEIGHT —
CUSTOMER DRAWING

Tyco Electronics Corporation
Harrisburg, Pa 17105

HEADER ASSEMBLY, VERTICAL, LOW PROFILE, IDC

SIZE	CAGE CODE	DRAWING NO	RESTRICTED TO
A1	00779	C-2-1437044-7	

SCALE: 4:1 SHEET 1 OF 1 REV B

OBSOLETE
NOT the LATEST
REVISION