# 3M™ POWER RIGHT ANGLE HEADER MODULE FOR HARD METRIC APPLICATIONS

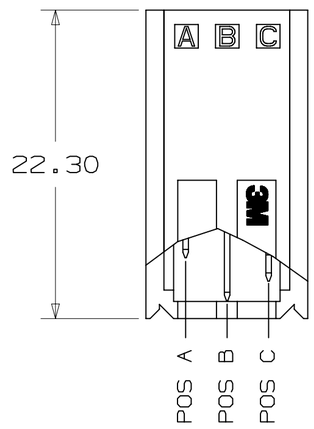


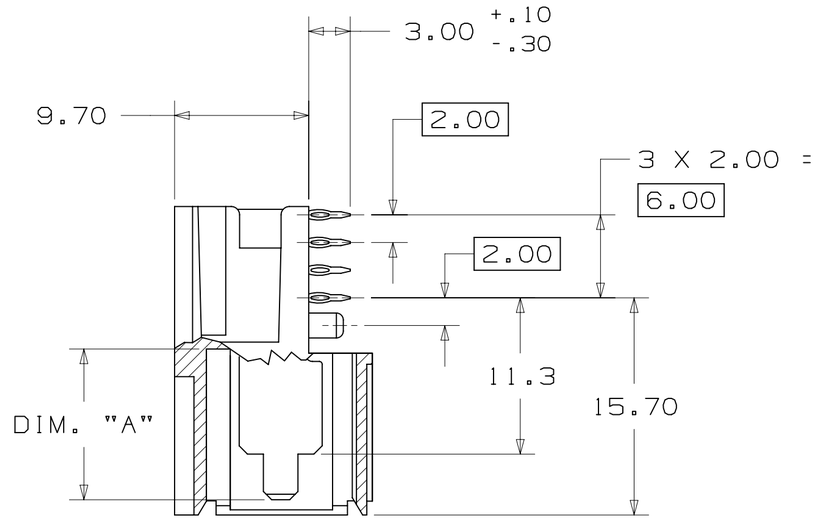


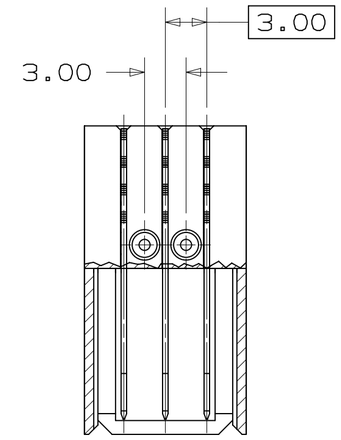


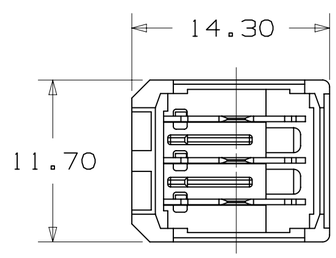


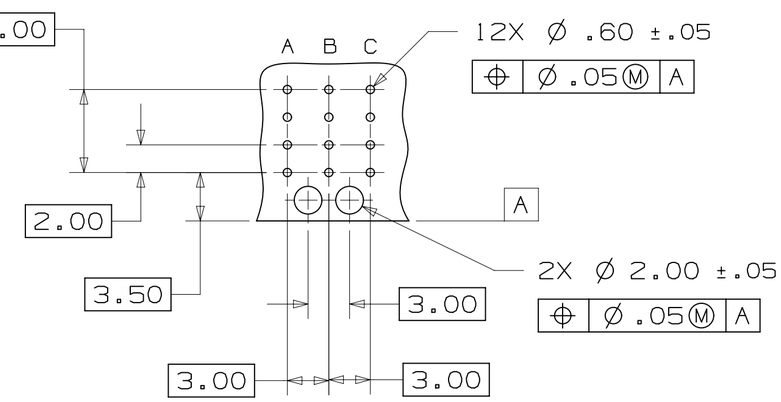


PCB LAYOUT

## NOTES

1. MATERIAL:
   INSULATOR: GLASS FILLED THERMOPLASTIC (PBT) UL94V-0
   CONTACTS: COPPER ALLOY.
2. PLATING -LR:
   CONTACT AREA: .08μm MIN Au OVER .69μm MIN PdNi
   TAIL AREA: 2.54μm MAX MATTE Sn
   UNDERCOAT: 1.27μm MIN Ni.
3. REGULATORY INFORMATION:
   ROHS COMPLIANT. SEE THE REGULATORY INFORMATION APPENDIX (RIA) IN THE "ROHS COMPLIANCE" SECTION OF WWW.3MCONNECTORS.COM FOR COMPLIANCE INFORMATION (RIA E1 & C1 APPLY)
4. ELECTRICAL PERFORMANCE:
   TEMPERATURE RANGE: -55° C TO +125° C
   VOLTAGE: 1000 VAC rms
   CURRENT RATING: ALL LINES DRIVERS
   9.0 AMPS @ 20° C
   7.0 AMPS @ 70° C
   4.5 AMPS @ 100° C
5. IN THE EVENT OF CONFLICT BETWEEN THIS DATA AND THAT CONTAINED IN THE PRODUCT SPECIFICATION, THE PRODUCT SPECIFICATION TAKES PRECEDENT.
6. PART NUMBER: SEE TABLE
7. FOR MATING PRODUCT USE:
   HM-PWR-SCK-01-XX POWER SOCKET CONNECTOR.
8. PCB THICKNESS: 1.40mm MINIMUM.

REVISION D

DRAWING NUMBER 78-5100-2381-1

BLADE POS. HEIGHT

| PART DESCRIPTION | DIM. "A" | | |
|---|---|---|---|
| | POS A | POS B | POS C |
| HM-PWR-HDR-01-LR | 10.9 | 10.9 | 10.9 |
| HM-PWR-HDR-02-LR | 9.3 | 10.9 | 9.3 |
| HM-PWR-HDR-03-LR | 9.3 | 10.9 | 7.6 |
| HM-PWR-HDR-04-LR | 9.3 | 7.6 | 9.3 |
| HM-PWR-HDR-05-LR | 10.9 | 9.3 | 7.6 |
| HM-PWR-HDR-06-LR | 9.3 | 9.3 | 7.6 |
| HM-PWR-HDR-07-LR | 7.6 | 7.6 | 10.9 |
| HM-PWR-HDR-08-LR | 7.6 | 9.3 | 10.9 |
| HM-PWR-HDR-09-LR | 10.9 | 9.3 | 10.9 |
| HM-PWR-HDR-10-LR | 7.6 | 7.6 | 7.6 |
| HM-PWR-HDR-11-LR | 10.9 | 9.3 | 9.3 |
| HM-PWR-HDR-12-LR | 9.3 | 7.6 | 10.9 |
| HM-PWR-HDR-13-LR | 10.9 | 9.3 | 9.3 |

| REV | ECO | ISSUE DATE AND DESCRIPTION | DRFT | CHKD |
|---|---|---|---|---|
| D | 40633 | MAY 11,2012 REVISE NOTE 4 AND REDRAWN | JNC | TS |
| C | 36370 | SEP 16,2011 REF ECO FOR REV CHANGES | MWL | TS |

DESIGN REFERENCE NEXT ASSEMBLY

DISTRIBUTION CODES

DRFT ML DATE JAN 17,2011 MFG DATE

CHKD DATE APPVL TS DATE JAN 17,2011

DIVISION Interconnect Solutions DIVISION CODE ISD

DO NOT SCALE DRAWING SCALE

TOLERANCES EXCEPT AS NOTED

THIRD ANGLE PROJECTION

INCHES .0 ± .00 ± .000 ± .0000 ±

INTERPRET PER ASME Y14.5 - 1994

MILLIMETERS 0 ± .0 ± .30 .00 ± .20 .000 ± .10

MAX SURFACE ROUGHNESS ☐ ALL SURFACES ☐ MARKED ONLY

ANGLES ±

3M 3M Center St. Paul, MN 55144

© 3M COPYRIGHT 2012
This document and the information it contains are 3M property and may not be reproduced or further distributed without 3M permission, or used or disclosed other than for 3M authorized purposes. All rights reserved.

TITLE HM-PWR-HDR-XX-XX, POWER RIGHT ANGLE HEADER MODULE

CAGE NUMBER SIZE C DRAWING NO. 78-5100-2381-1 REV. D

MODEL DET. LISTS ☐ YES ☒ NO SHT 1 OF 1

3M™ ELECTRONIC SOLUTIONS DIVISION
INTERCONNECT SOLUTIONS
http://www.3mconnectors.com

3M IS A TRADEMARK OF 3M COMPANY.
FOR TECHNICAL, SALES OR ORDERING INFORMATION CALL 800-225-5373