P/N OF FCII CONNECTOR	ØD (µm)	FERRULE MATERIAL	BOOT COLOR	CABLE DIAMETER	CABLE TYPE
106053-0000	127	Zr	BLACK	3mm	MULTIMODE
106053-0099		LOW COST Zr			
106053-0020*		Zr			
106053-2000	125.5		YELLOW		SINGLE MODE
106053-2070			BLACK		
106053-3000	128		BLACK		MULTIMODE
106053-4000	125		YELLOW		SINGLE MODE
106053-4070			BLACK		
106053-5000	126		YELLOW		
106053-5020*					
106053-5070			BLACK		
106053-7000	127		YELLOW		
106053-7070			BLACK		
106053-5300	126		YELLOW	2.4mm	

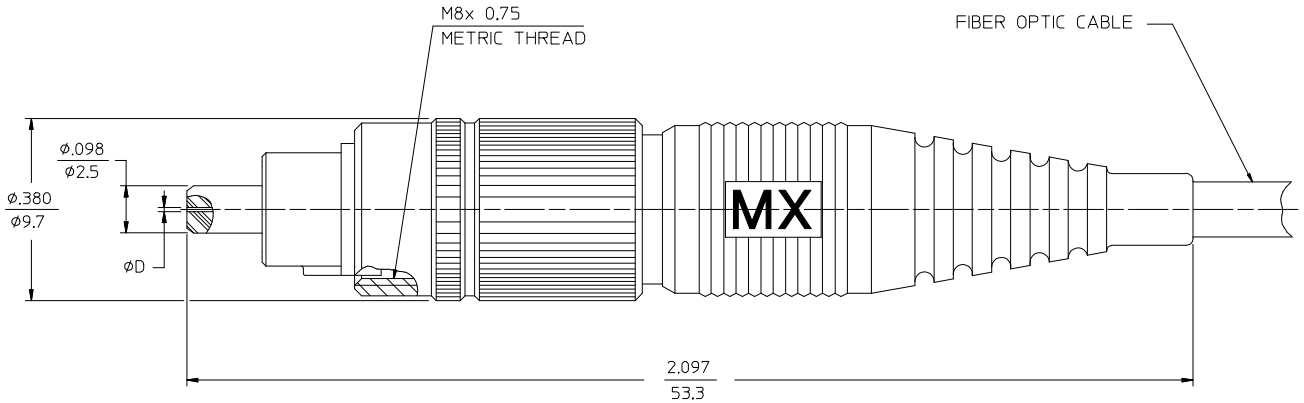

* P/Ns 106053-0020 AND 106053-5020 ARE BULK PACKED IN QUANTITIES OF 100 PCS.

ENTER DESCRIPTION
EC NO: MF2017-0132
DRWN:MHANUMAPPARE 2016/11/04
CHKD:
APPR: IGUMIN 2016/11/16
DESCRIPTION
D
REV

QUALITY SYMBOLS
▼=0
▽=0

GENERAL TOLERANCES (UNLESS SPECIFIED)

	mm	INCH
4 PLACES	± ---	± ---
3 PLACES	± ---	± ---
2 PLACES	± ---	± ---
1 PLACE	± ---	± ---
0 PLACE	±	±
ANGULAR ±1/2°		

DRAFT WHERE APPLICABLE MUST REMAIN WITHIN DIMENSIONS

DIMENSION STYLE: IN/MM
SCALE: 5:1
DESIGN UNITS: INCH
THIRD ANGLE PROJECTION

DRAWN BY: RPACIFICI DATE: 2005/12/22
CHECKED BY DATE
APPROVED BY DATE

TITLE: FCII CONNECTOR

molex

MATERIAL NO.: SEE TABLE
DOCUMENT NO.: SD-106053-YYY0
SHEET NO.: 1 OF 1
SIZE: C

THIS DRAWING CONTAINS INFORMATION THAT IS PROPRIETARY TO MOLEX INCORPORATED AND SHOULD NOT BE USED WITHOUT WRITTEN PERMISSION