MATERIAL NUMBER	OLD PART NUMBER	FINISHED LENGTH
130006-1160	105000A01F030	3.00' +1.75" -0 [.9M +44.5 -0]
130006-1163	105000A01F060	6.00' +3.50" -0 [1.8M +88.9 -0]
130006-1168	105000A01F090	9.00' +3.50" -0 [2.7M +88.9 -0]
130006-1171	105000A01F120	12.00' +6.50" -0 [3.7M +165.1 -0]
130006-1174	105000A01F150	15.00' +6.50" -0 [4.6M +165.1 -0]
130006-1178	105000A01F180	18.00' +6.50" -0 [5.5M +165.1 -0]
130006-1179	105000A01F200	20.00' +6.50" -0 [6.1M +165.1 -0]
130006-1183	105000A01F250	25.00' +12.50" -0 [7.6M +317.5 -0]

MATERIAL NUMBER	OLD PART NUMBER	FINISHED LENGTH
130006-1186	105000A01F300	30.00' +12.50" -0 [9.1M +317.5 -0]
130006-1190	105000A01F350	35.00' +12.50' -0 [10.7M +317.5 -0]
130006-1192	105000A01F400	40.00' +12.50" -0 [12.2M +317.5 -0]
130006-1195	105000A01F450	45.00' +12.50" -0 [13.7M +317.5 -0]
130006-1198	105000A01F500	50.00' +24.50" -0 [15.2M +622.3 -0]

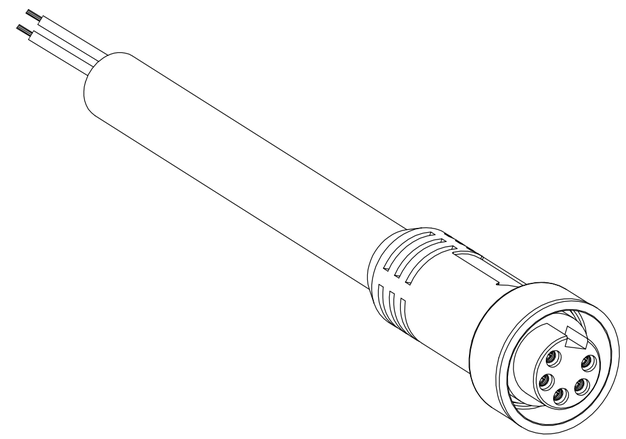

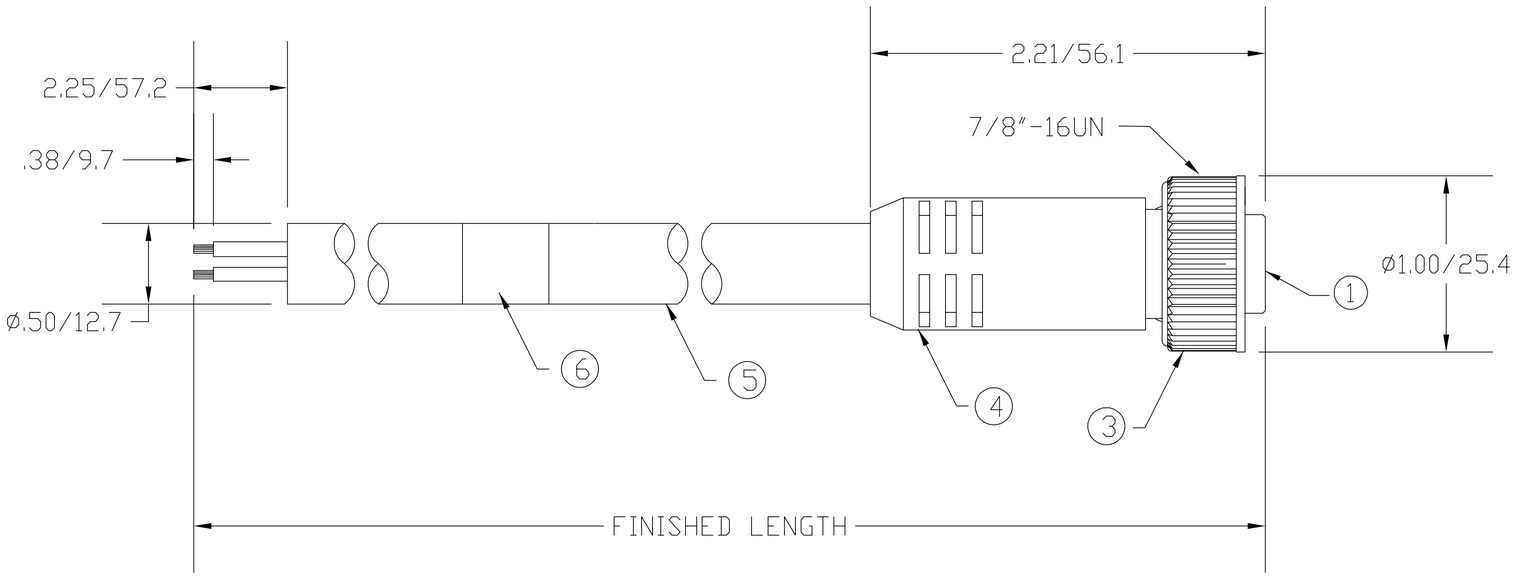

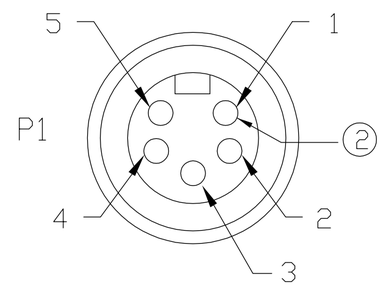

FEMALE FACE VIEW

P1

1	WHITE
2	RED
3	GREEN-YELLOW
4	ORANGE
5	BLACK

WIRING DIAGRAM

VOLTAGE RATING	600 VAC/VDC
AMPERAGE RATING	8 AMPS
PROTECTION	IP67
OPERATING TEMPERATURE	-20°C TO 105°C
UL CERTIFICATIONS	UL RECOGNIZED, FILE NO. E46237
CSA CERTIFICATIONS	CSA CERTIFIED, FILE NO. LR6837

ITEM	COMPONENT	MATERIAL	FINISH
1	INSERT	PVC	YELLOW
2	CONTACT SOCKET	COPPER ALLOY	GOLD OVER NICKEL
3	COUPLING NUT	ZINC DIE CAST	BLACK E-COATED
4	OVERMOLD	PVC	YELLOW
5	CABLE- 16 AWG, (65 x #34 COPPER STRANDING) 5 CONDUCTOR 600V, UL STOOW, CSA ST	PVC	YELLOW
6	LABEL	MYLAR	BLACK/YELLOW

RLSD DRAWING
EC NO: WNA2009-0624
DRWN: BWOODMAN 3/20/09
CH'KD: JM —
APPR: JFMURPHY 2009/04/01
DESCRIPTION
A
REV

QUALITY SYMBOL
▼=0
(C)=0

GENERAL TOLERANCES (UNLESS SPECIFIED)

	mm	INCH
4 PLACES	±----	±----
3 PLACES	±----	±----
2 PLACES	±----	±.01
1 PLACE	±0.3	±----
ANGULAR ±----°		

DRAFT WHERE APPLICABLE MUST REMAIN WITHIN DIMENSIONS

DIMENSION STYLE: IN/MM
SCALE: ----
DESIGN UNITS: ----
THIRD ANGLE PROJECTION

DRAWN BY: BW DATE: 2009/03/26
CHECKED BY: LH DATE: 2009/03/26
APPROVED BY: ---- DATE: ----

TITLE: MINI-CHANGE 5P FP CORDSET
---

molex MOLEX INCORPORATED

MATERIAL NO.: SEE CHART
DOCUMENT NO.: SD-130006-001
SHEET NO.: 1 OF 1
SIZE: C

THIS DRAWING CONTAINS INFORMATION THAT IS PROPRIETARY TO MOLEX INCORPORATED AND SHOULD NOT BE USED WITHOUT WRITTEN PERMISSION