MICRO SWITCH
a Honeywell Division
FED. MFG. CODE 91929

SWITCH – ENCLOSED

CATALOG LISTING
12HR11–10

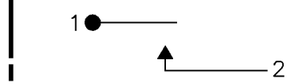

CIRCUIT DIAGRAM

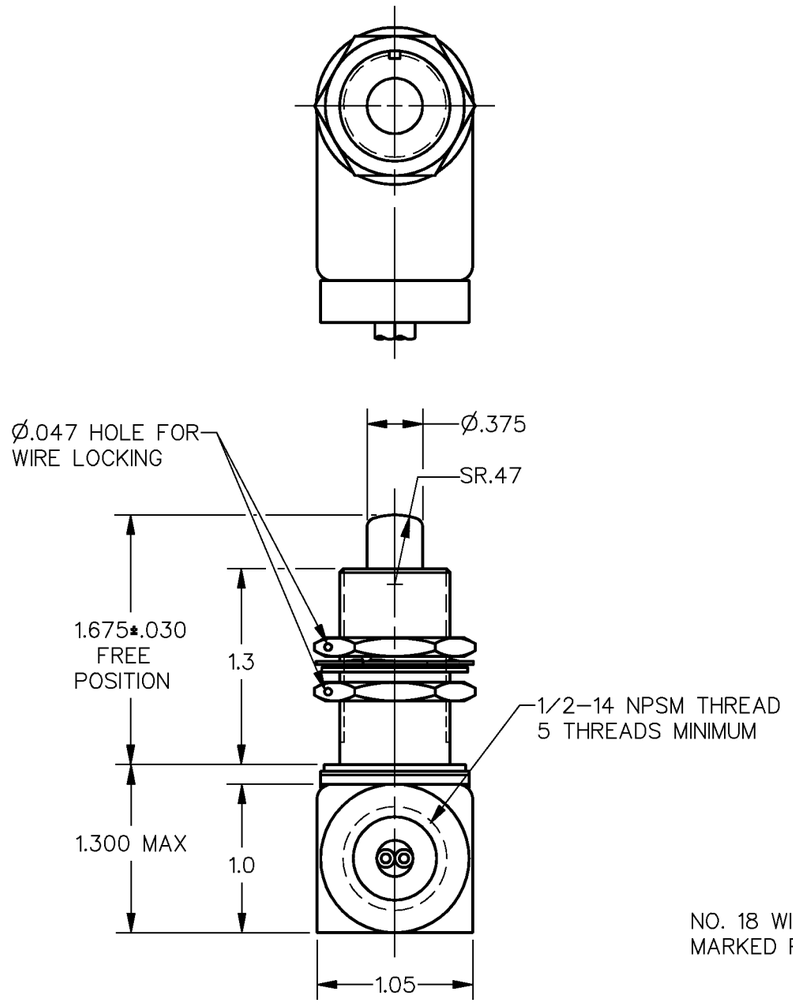

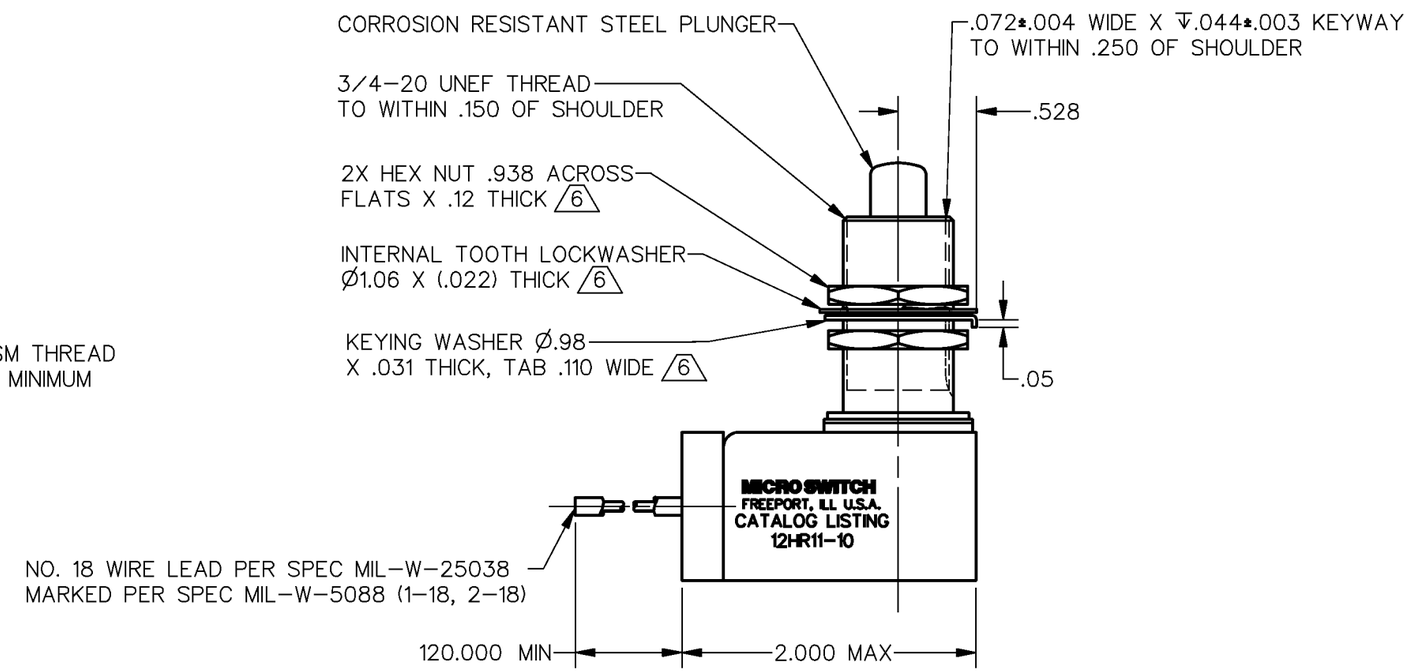

THIS DRAWING COVERS A PROPRIETARY ITEM AND IS THE PROPERTY OF MICRO SWITCH. A DIVISION OF HONEYWELL. THIS DRAWING IS NOT TO BE COPIED OR USED WITHOUT THE APPROVAL OF MICRO SWITCH

THIRD ANGLE PROJECTION

SCALE FULL

DO NOT SCALE PRINT

CHARACTERISTICS

OPERATING FORCE	6–12 LB
FULL OVERTRAVEL FORCE	35 LB MAX
RELEASE FORCE	5 LB MIN
PRETRAVEL	.050 MAX
DIFFERENTIAL TRAVEL	.015 MAX
OVERTRAVEL	.250 MIN

ELECTRICAL DATA

CONTACT ARRANGEMENT
1X S P N O

	28 VDC SEA LEVEL	28 VDC 50,000 FT
RES	5	
IND	2	

UNLESS OTHERWISE SPECIFIED TOLERANCES ARE

ONE PLACE	(.0)	±.030
TWO PLACE	(.00)	±.015
THREE PLACE	(.000)	±.005
ANGLES		±

WEIGHT

NOTES
1 – SWITCH SEALED PER MIL–S–8805 SYMBOL 5 SWITCH CHAMBER. WATERTIGHT TEST NOT APPLICABLE
2 – ALL EXPOSED PARTS ARE CORROSION RESISTANT
3 – CIRCUIT DIAGRAM AND CATALOG LISTING ARE PERMANENTLY MARKED ON SWITCH HOUSING
4 – LEAD IDENTIFICATION IS SHOWN ON CIRCUIT DIAGRAM
5 – SWITCH WILL OPERATE SATISFACTORILY IN TEMPERATURES FROM –85°F TO +599°F
6 HARDWARE MAY BE PACKAGED UNASSWMBLED PER MIL–S–8805

ANSI Y14.5M–1982 APPLIES

CATALOG LISTING 12HR11–10
PAGE 1 OF 1
RELEASE NO. PR–22487
REPLACES
ISSUE 3
M
CHECK
REVISIONS
A PR–22487 J A K 22 NOV 96
B 202627 G R T 21 MAR 01
CHECK
27 NOV 96
MAM
CHECK
22NOV96
DRAWN J A K
RASTER