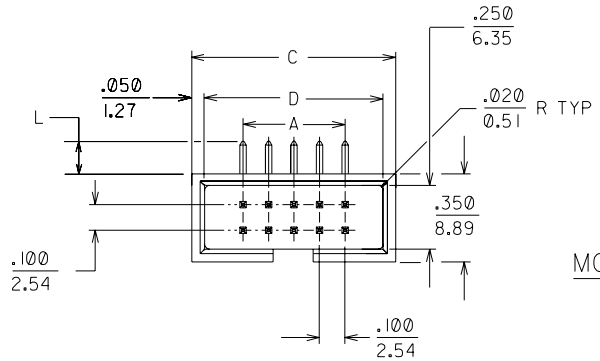


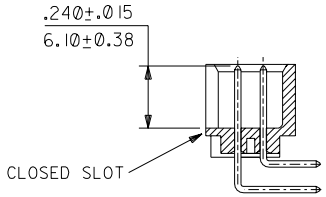


MOLEX IRELAND PRODUCTION ONLY

(OPTION)

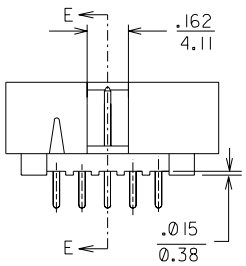


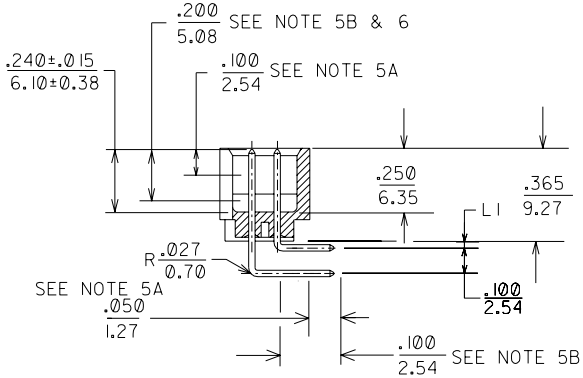


**SECTION E-E**

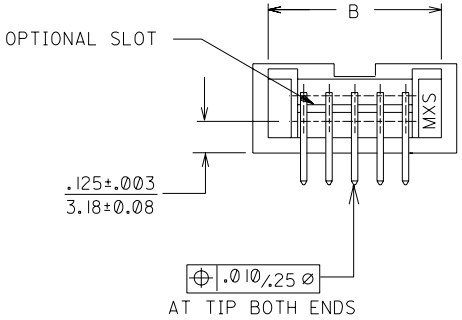


| 7 PART NO | L | L1 |
|---|---|---|
| 70247-**34 | .120 / 3.05 | 0 |
| 70247-**00 | | |
| 70247-**01 | | |
| 70247-**02 | | |
| 70247-**03 | | |
| 70247-**04 | | |

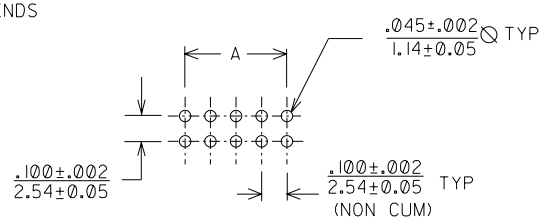


RECOMMENDED P.C. BOARD HOLE LAYOUT

| 8 PART NO. | CKT SIZE | A | B | C | D |
|---|---|---|---|---|---|
| 70247-08** | 08 | 0.300/7.62 | 0.580/14.73 | 0.700/17.78 | 0.600/15.24 |
| 70247-10** | 10 | 0.400/10.16 | 0.680/17.27 | 0.800/20.32 | 0.700/17.78 |
| 70247-12** | 12 | 0.500/12.70 | 0.780/19.81 | 0.900/22.86 | 0.800/20.32 |
| 70247-14** | 14 | 0.600/15.24 | 0.880/22.35 | 1.000/25.40 | 0.900/22.86 |
| 70247-16** | 16 | 0.700/17.78 | 0.980/24.89 | 1.100/27.94 | 1.000/25.40 |
| 70247-20** | 20 | 0.900/22.86 | 1.180/29.97 | 1.300/33.02 | 1.200/30.48 |
| 70247-24** | 24 | 1.100/27.94 | 1.380/35.05 | 1.500/38.10 | 1.400/35.56 |
| 70247-26** | 26 | 1.200/30.48 | 1.480/37.59 | 1.600/40.64 | 1.500/38.10 |
| 70247-30** | 30 | 1.400/35.56 | 1.680/42.67 | 1.800/45.72 | 1.700/43.18 |
| 70247-34** | 34 | 1.600/40.64 | 1.880/47.75 | 2.000/50.80 | 1.900/48.26 |
| 70247-40** | 40 | 1.900/48.26 | 2.180/55.37 | 2.300/58.42 | 2.200/55.88 |
| 70247-44** | 44 | 2.100/53.34 | 2.380/60.45 | 2.500/63.50 | 2.400/60.96 |
| 70247-48** | 48 | 2.300/58.42 | 2.580/65.53 | 2.700/68.58 | 2.600/66.04 |
| 70247-50** | 50 | 2.400/60.96 | 2.680/68.07 | 2.800/71.12 | 2.700/68.58 |
| 70247-56** | 56 | 2.700/68.58 | 2.980/75.69 | 3.100/78.74 | 3.000/76.20 |
| 70247-60** | 60 | 2.900/73.66 | 3.180/80.77 | 3.300/83.82 | 3.200/81.28 |
| 70247-64** | 64 | 3.100/78.74 | 3.380/85.85 | 3.500/88.90 | 3.400/86.36 |
| 70247-72** | 72 | 3.500/88.90 | 3.780/96.01 | 3.900/99.06 | 3.800/96.52 |

NOTES:
1. PIN PUSHOUT FORCE (.9072KG)/2LBS MIN.
2. PIN SOLDERABILITY PER MOLEX SPEC. ES-152
3. PRODUCT SPEC: PS-70246 APPLIES.
4. WAFER TO BE FLAT WITHIN (0.03MM/CM) 0.003IN/IN
5. DIMENSIONS FOR PLATING LOCATION : A-MEASURE POINT FOR THICKNESS.
   B-MINIMUM COVERAGE
6. GOLD END OF PIN UNLESS OVERALL PLATED.
7. FINISH : ALL WITH 50uin MIN NICKEL UNDERPLATE OVERALL.
   **00 - 20uin MIN AU & 100uin MIN TIN IN SELECTED AREAS.
   **01 - 15uin MIN AU & 75uin MIN TIN IN SELECTED AREAS.
   **02 - 30uin MIN AU & 75uin MIN TIN IN SELECTED AREAS.
   **03 - 200uin MIN TIN
   **04 - 5uin MIN AU & 75uin MIN TIN IN SELECTED AREAS.
   **34 - 5uin MIN AU OVER 40uin MIN PD/NI (80/20) &
   100uiN TIN IN SELECTED AREAS.
8. CHECK WITH SALES OFFICE FOR AVAILABILITY.

INCH / MM

| LTR | REVISION RECORD | ECN | DR / CHK | DATE |
|---|---|---|---|---|
| F | LEAD-FREE CONVERSION AS PER ECN NO. S2004-0489 | - | RAMESH / PTLIM | 040319 |
| E2 | ADD IN SHANNON CLOSED SLOT VERSION (ECN# S2004-0491) | - | SEE / LING | 040224 |
| E1 | CHG PART NO FORMAT TO 70247-**** (ECN# S2000-0383) | - | SEE / TOH | 000412 |
| E | REVISED PER (ECN# S30055) | - | JACK / ANG | 920811 |
| D | RTM 48 CKT (ECN# S2124) | - | ANG / ROY | 910909 |
| C | CHG PINS PER (ECN# S1630) | - | ANG / ROY | 910513 |

REVISE ONLY ON CAD SYSTEM

MATERIAL :
PINS: .025 SQ. 260 BRASS
WAFER: 15% G.F.PBT

FINISH :
SEE NOTE 7

DRAWN BY JENNIFER 210987
CHK'D BY MAX LAI 901214
APPR'D BY ALAN B 210987
SCALE 2 : 1

molex MOLEX SINGAPORE PTE LTD
SHEET 1 OF 1

GENERAL TOLERANCES ± 0.20/.008
REV F

DWG. NO.: SDA|70247-**00-04

TITLE : R.A.ASSY,C-GRID SHROUDED HEADER (SLOTTED W/O STANDOFFS)

DWG. NO. SDA|70247-**00-04
CAD FILE S70247000.DGN
DO NOT SCALE DRAWING

THIS DRAWING CONTAINS INFORMATION THAT IS PROPRIETARY TO MOLEX (S) PTE LTD AND SHOULD NOT BE USED WITHOUT WRITTEN PERMISSION