THIS DRAWING IS UNPUBLISHED. RELEASED FOR PUBLICATION -,- .
© COPYRIGHT - By - ALL RIGHTS RESERVED.

LOC	DIST
FT	0

REVISIONS

P	LTR	DESCRIPTION	DATE	DWN	APVD
	A	REVISED PER ECO-11-023039	16FEB12	KH	MS

NOTES:

MATERIAL:
HOUSING: THERMOPLASTIC, UL94V-2.
TERMINALS: BRASS, BRIGHT TIN PLATE.
SCREWS: 6-32, STEEL, PLATED ZINC W/ CLEAR CHROMATE COATING. UNLESS OTHERWISE SPECIFIED.

ELECTRICAL:
MAXIMUM CURRENT: 20A.
OPERATING VOLTAGE: 600V.
WIRE RANGE: 12-22 AWG.

ENVIRONMENTAL:
OPERATING TEMP.: -60°C TO 105°C

1. SCREWS ARE STAINLESS, BOTTOMED.
2. ALL SCREWS BOTTOMED, TORQUE 2 TO 4 IN-LBS

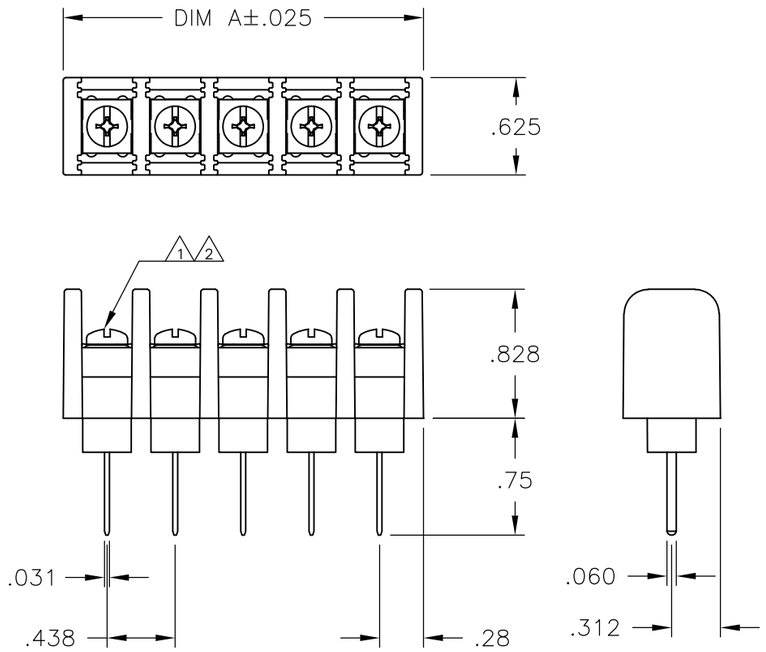

	DIM A	NO. OF POS.	CATALOG NUMBER	PART NUMBER
2	11.937	27	SSB7TP270701	2-1546979-7
2	11.500	26	SSB7TP260701	2-1546979-6
2	11.062	25	SSB7TP250701	2-1546979-5
2	10.625	24	SSB7TP240701	2-1546979-4
2	10.187	23	SSB7TP230701	2-1546979-3
2	9.750	22	SSB7TP220701	2-1546979-2
2	9.312	21	SSB7TP210701	2-1546979-1
2	8.875	20	SSB7TP200701	2-1546979-0
2	8.437	19	SSB7TP190701	1-1546979-9
2	8.000	18	SSB7TP180701	1-1546979-8
2	7.562	17	SSB7TP170701	1-1546979-7
2	7.125	16	SSB7TP160701	2-1437417-2
2	6.687	15	SSB7TP150701	2-1437417-1
2	6.250	14	SSB7TP140701	1-1546979-4
2	5.812	13	SSB7TP130701	1-1437417-9
2	5.375	12	SSB7TP120701	1-1546979-2
2	4.937	11	SSB7TP110701	1-1546979-1
2	4.500	10	SSB7TP100701	1-1546979-0
2	4.062	9	SSB7TP090701	1546979-9
2	3.625	8	SSB7TP080701	1546979-8
1	3.187	7	SSB7TP070703	1-1437417-5
2	3.187	7	SSB7TP070701	1-1437417-4
2	2.750	6	SSB7TP060701	1-1437417-3
2	2.312	5	SSB7TP050701	1546979-5
2	1.875	4	SSB7TP040701	1546979-4
2	1.437	3	SSB7TP030701	1546979-3
2	1.000	2	SSB7TP020701	1546979-2

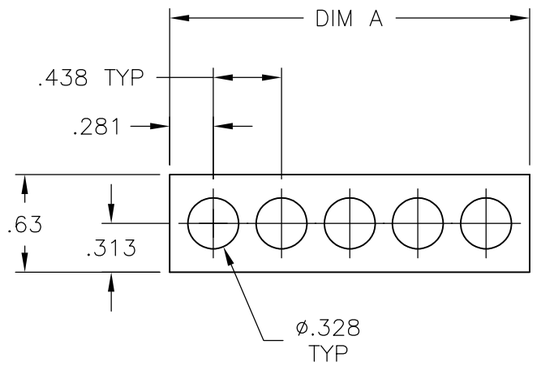

RECOMMENDED PANEL LAYOUT

THIS DRAWING IS A CONTROLLED DOCUMENT.

DIMENSIONS: INCHES

TOLERANCES UNLESS OTHERWISE SPECIFIED:
0 PLC ± -
1 PLC ± -
2 PLC ± .02
3 PLC ± .010
4 PLC ± -
ANGLES ± 1°

MATERIAL -
FINISH -

DWN S SCHLGEL 11/16/04
CHK S YODER 11/16/04
APVD S YODER 11/16/04
PRODUCT SPEC —
APPLICATION SPEC —
WEIGHT —

TE Connectivity

NAME SSB7TPXX0701

SIZE	CAGE CODE	DRAWING NO	RESTRICTED TO
A3	00779	C-1-1437417-3	—

CUSTOMER DRAWING | SCALE NTS | SHEET 1 OF 1 | REV A