REV.	DATE	ECR NO.	DESCRIPTION
A	01/30/04	–	UPDATE DRAWING FORMAT
B	03/03/09	–	REVISE NOTE 2 – HEX CRIMP TO .100"

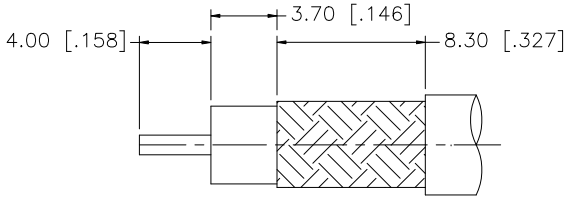

RECOMMENDED
CABLE STRIPPING DIM'S

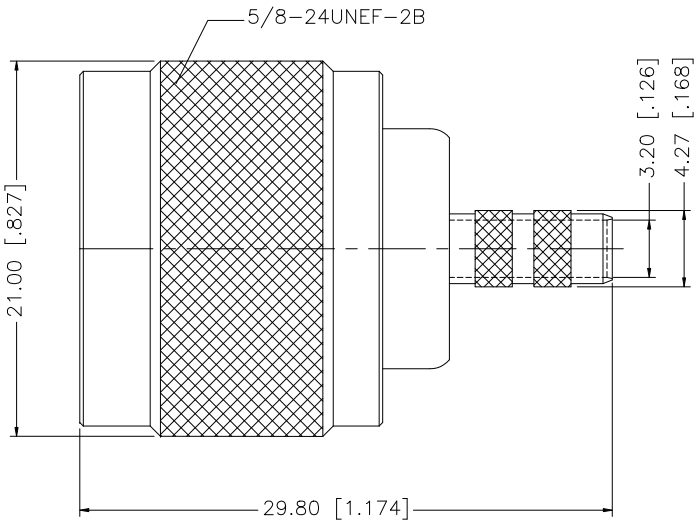

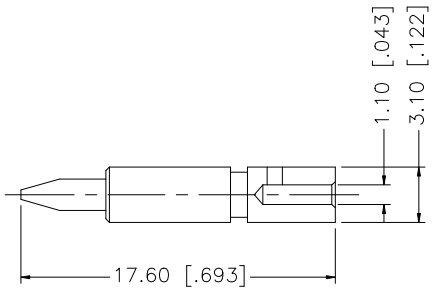

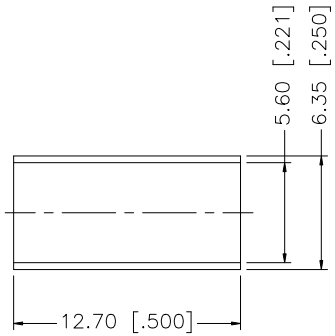

NOTES:

1. CRIMPED FERRULE HEX CRIMP SIZE .213" [5.41]
2. CRIMPED CONTACT PIN HEX CRIMP SIZE .100" [2.54]

	DESCRIPTION	MATERIAL	FINISH	QTY
8				
7				
6				
5				
4	FERRULE	COPPER	NEXCOTE	1
3	CONTACT PIN	BRASS	GOLD	1
2	INSULATOR	PTFE	NATURAL	1
1	BODY	BRASS	NEXCOTE	1

UNLESS OTHERWISE SPECIFIED DIMENSIONS ARE IN MILLIMETERS. DIMENSIONS IN [ ] ARE IN INCHES AND FOR CUSTOMER REFERANCE ONLY.

UNLESS OTHERWISE SPECIFIED TOLERANCES FOR MILLIMETERS ARE:
0.5 – 8mm ± 0.20mm
8 – 30mm ± 0.40mm
30 – 120mm ± 0.50mm

UNLESS OTHERWISE SPECIFIED TOLERANCES FOR INCHES ARE:
.020 – .315 = ± 0.007"
.315 – 1.180 = ± 0.015"
1.180 – 4.724 = ± 0.020"

DO NOT SCALE DRAWING

APPROVALS		DATE
DRAWN	GRS	03/03/09
CHECKED		
ISSUED		
SHEET	1 OF 1	
CAD FILE	C:/172/172142.DWG	

Amphenol Connex

PART DESCRIPTION
N CRIMP PLUG
(FOR RG–55/U, 142A/U, 223/U, 400/U)

PART NO. 172142

DWG. NO.	REV.	SIZE	SCALE
172142.DWG	B	A	NA