Axial Leads/SpinGuard®

GENERAL INFORMATION

AVX SA Series
Conformally Coated Axial Leaded MLC

Temperature Coefficients: C0G (NP0), X7R, X5R, Z5U
10, 50, 100, 200 Volts

Case Material: Epoxy (Flame Retardant to UL Bulletin 492, Par. 280)

Lead Material: Solderable

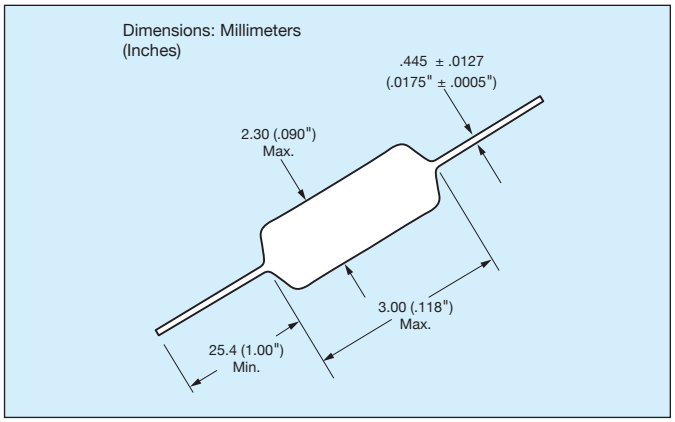

HOW TO ORDER

SA10 — **Conformal Axial Size**
SA05
SA10
SA11
SA20
SA30
SA40

5 — **Voltage**
Z = 10V
5 = 50V
1 = 100V
2 = 200V

E — **Dielectric**
A = C0G (NP0)
C = X7R
D = X5R
E = Z5U

104 — **Capacitance**
First two digits are the significant figures of capacitance. Third digit indicates the additional number of zeros. For example, order 100,000 pF as 104. (For values below 10pF use "R" in place of decimal point, e.g., 1R4 = 1.4pF.)

Z — **Capacitance Tolerance**
C0G (NP0):
C = ±.25pF
D = ±.5pF
F = ±1%
G = ±2%
J = ±5%
K = ±10%

X7R:
J = ±5%
K = ±10%
M = ±20%

X5R:
K = ±10%
M = ±20%

Z5U:
M = ±20%
Z = +80% -20%

A — **Failure Rate**
A = Not Applicable

R — **Leads**
Standard (Solderable)
R = RoHS Compliant

RoHS COMPLIANT

Please select correct termination style.

MARKING (EXAMPLE)

SpinGuard marking includes full date code/lot code identification. A first in the industry, this format provides complete traceability to all manufacturing processes involving the basic chip and final assembly. Total Shipment traceability is also provided.

SA05

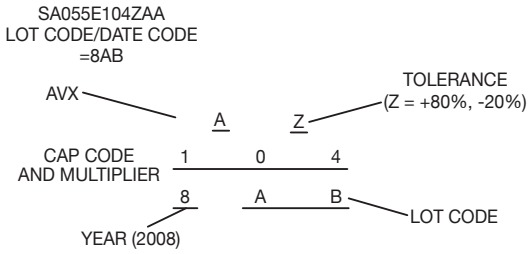

SA10, 11, 20, 30, 40

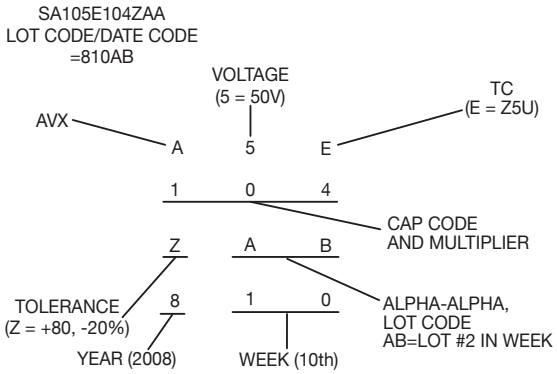

PACKAGING REQUIREMENTS

A = Standard Reels (see Page 49)
B = 1000 piece reels (distributors only, tight tolerance only)
C = Ammo Pack (see Page 49)
D thru J = See Special Lead Configurations (Page 41)
M = 26mm tape and reel
N = 26mm ammo pack
R = RoHS, Standard reels (See page 49)

Axial Leads/SpinGuard®

C0G (NP0) Dielectric

SIZE AND CAPACITANCE SPECIFICATIONS

Dimensions: Millimeters (Inches)

	AVX Style	SA05		SA10			SA11		SA20		SA30		SA40	
	Length (L)	3.00 (.118")		4.32 (.170")			4.32 (.170")		6.60 (.260")		7.37 (.290")		10.16 (.400")	
	Diameter (D)	2.30 (.090")		2.54 (.100")			3.05 (.120")		2.54 (.100")		3.81 (.150")		3.81 (.150")	
	Lead Diameter	.445 (.0175")		.445 (.0175")			.445 (.0175")		.445 (.0175")		.445 (.0175")		.445 (.0175")	
	Lead Length	25.4 (1.00")		25.4 (1.00")			25.4 (1.00")		25.4 (1.00")		25.4 (1.00")		25.4 (1.00")	
Cap. in. pF	Typical AVX Part Nos.	WVDC 100	50	WVDC 200	100	50	WVDC 100	50	WVDC 100	50	WVDC 100	50	WVDC 100	50
1.0*	SA102A1R0DAR													
⋮	⋮													
9.1*	SA102A9R1DAR													
10	SA102A100JAR													
12	SA102A120JAR													
15	SA102A150JAR													
18	SA102A180JAR													
22	SA102A220JAR													
27	SA102A270JAR													
33	SA102A330JAR													
39	SA102A390JAR													
47	SA102A470JAR													
56	SA102A560JAR													
68	SA102A680JAR													
82	SA102A820JAR													
100	**SA102A101JAR**													
120	SA102A121JAR													
150	SA101A151JAR													
180	SA101A181JAR													
220	SA101A221JAR													
270	SA101A271JAR													
330	SA101A331JAR													
390	SA101A391JAR													
470	SA101A471JAR													
560	SA101A561JAR													
680	SA101A681JAR													
820	SA101A821JAR													
1000	**SA105A102JAR**													
1200	SA201A122JAR													
1500	SA201A152JAR													
1800	SA205A182JAR													
2200	**SA301A222JAR**													
2700	SA301A272JAR													
3300	SA301A332JAR													
3900	SA301A392JAR													
4700	**SA305A472JAR**													
5600	SA401A562JAR													
6800	SA401A682JAR													
8200	**SA405A822JAR**													
10,000	**SA405A103JAR**													
12,000	SA405A123JAR													

For other tolerances see Part No. Codes
For other voltages see Part No. Codes
AVX Style

= Industry preferred values

*"C&D" Tolerance Only

Axial Leads/SpinGuard®

X7R Dielectric

SIZE AND CAPACITANCE SPECIFICATIONS

Dimensions: Millimeters (Inches)

AVX Style	SA05	SA10	SA11	SA20	SA30	SA40
Length (L)	3.00 (.118")	4.32 (.170")	4.32 (.170")	6.60 (.260")	7.37 (.290")	10.16 (.400")
Diameter (D)	2.30 (.090")	2.54 (.100")	3.05 (.120")	2.54 (.100")	3.81 (.150")	3.81 (.150")
Lead Diameter	.445 (.0175")	.445 (.0175")	.445 (.0175")	.445 (.0175")	.445 (.0175")	.445 (.0175")
Lead Length	25.4 (1.00")	25.4 (1.00")	25.4 (1.00")	25.4 (1.00")	25.4 (1.00")	25.4 (1.00")

Cap. in. pF	Typical AVX Part Nos.	SA05 WVDC 200	SA05 WVDC 100	SA05 WVDC 50	SA10 WVDC 200	SA10 WVDC 100	SA10 WVDC 50	SA11 WVDC 100	SA11 WVDC 50	SA20 WVDC 100	SA20 WVDC 50	SA30 WVDC 100	SA30 WVDC 50	SA40 WVDC 100	SA40 WVDC 50
220	SA102C221KAR														
270	SA102C271KAR														
330	SA102C331KAR														
390	SA102C391KAR														
470	SA102C471KAR														
560	SA101C561KAR														
680	SA101C681KAR														
820	SA101C821KAR														
1000	SA101C102KAR														
1200	SA101C122KAR														
1500	SA101C152KAR														
1800	SA101C182KAR														
2200	SA101C222KAR														
2700	SA101C272KAR														
3300	SA101C332KAR														
3900	SA101C392KAR														
4700	SA101C472KAR														
5600	SA101C562KAR														
6800	SA101C682KAR														
8200	SA105C822KAR														
10,000	**SA105C103KAR**														
12,000	SA105C123KAR														
15,000	SA105C153KAR														
18,000	SA105C183KAR														
22,000	SA105C223KAR														
27,000	SA105C273KAR														
33,000	SA105C333KAR														
39,000	SA105C393KAR														
47,000	**SA105C473KAR**														
56,000	SA115C563KAR														
68,000	SA115C683KAR														
82,000	SA115C823KAR														
100,000	**SA115C104KAR**														
120,000	SA305C124KAR														
150,000	SA305C154KAR														
180,000	SA305C184KAR														
220,000	**SA305C224KAR**														
270,000	SA305C274KAR														
330,000	SA305C334KAR														
470,000	SA405C474KAR														
1,000,000	SA305C105KAR														

For other tolerances see Part No. Codes
For other voltages see Part No. Codes
AVX Style

= Industry preferred values

Axial Leads/SpinGuard®

Z5U Dielectric

SIZE AND CAPACITANCE SPECIFICATIONS

Dimensions: Millimeters (Inches)

	AVX Style	SA05	SA10		SA11		SA20		SA30		SA40	
	Length (L)	3.00 (.118")	4.32 (.170")		4.32 (.170")		6.60 (.260")		7.37 (.290")		10.16 (.400")	
	Diameter (D)	2.30 (.090")	2.54 (.100")		3.05 (.120")		2.54 (.100")		3.81 (.150")		3.81 (.150")	
	Lead Diameter	.445 (.0175")	.445 (.0175")		.445 (.0175")		.445 (.0175")		.445 (.0175")		.445 (.0175")	
	Lead Length	25.4 (1.00")	25.4 (1.00")		25.4 (1.00")		25.4 (1.00")		25.4 (1.00")		25.4 (1.00")	
Cap. in. pF	**Typical AVX Part Nos.**	**WVDC 50**	**WVDC 100**	**WVDC 50**	**WVDC 100**	**WVDC 50**	**WVDC 100**	**WVDC 50**	**WVDC 100**	**WVDC 50**	**WVDC 100**	**WVDC 50**
10,000	**SA105E103ZAR**											
15,000	SA105E153ZAR											
22,000	SA105E223ZAR											
33,000	SA105E333ZAR											
47,000	SA105E473ZAR											
68,000	SA105E683ZAR											
***100,000**	**SA105E104ZAR**											
150,000	SA105E154ZAR											
220,000	**SA105E224ZAR**											
330,000	**SA115E334ZAR**											
470,000	**SA305E474ZAR**											
680,000	SA305E684ZAR											
820,000	SA305E824ZAR											
1,000,000	**SA305E105ZAR**											

For other tolerances see Part No. Codes
For other voltages see Part No. Codes
AVX Style

= Industry preferred values

***Preferred Industry Decoupling Capacitor —** Insertable on .300" centers.
SA105E104ZAA

SIZE AND CAPACITANCE SPECIFICATIONS

Dimensions: Millimeters (Inches)

	AVX Style	SA10
	Length (L)	4.32 (.170")
	Diameter (D)	2.54 (.100")
	Lead Diameter	.445 (.0175")
	Lead Length	25.4 (1.00")
Cap. in. µF	**Typical AVX Part Nos.**	**WVDC 10**
1.8	SA10ZD185KAR	
2.7	SA10ZD275KAR	
3.3	SA10ZD335KAR	
4.7	SA10ZD475KAR	

For other tolerances see Part No. Codes
For other voltages see Part No. Codes
AVX Style

= **Industry preferred values**

Axial Leads/SpinGuard®/AA Series

Automotive

GENERAL INFORMATION

AVX AA Series

Electrical Characteristics: AA101C103K4R

Capacitance @ 25ºC, 1kHz, 1Vrms	0.0100µF
Capacitance Tolerance	±10 %
Dissipation Factor @ 25ºC	2.5% Max
Rated Voltage	100Vdc
Dielectric Withstand Voltage	250Vdc
Insulation Resistance @ 25ºC @ Rated Voltage	100000 Mohms

Temperature Characteristics:

X7R (-55 to + 125ºC ± 15% @ 0Vdc)

Lead Material:

RoHS Compliant 100% Tin

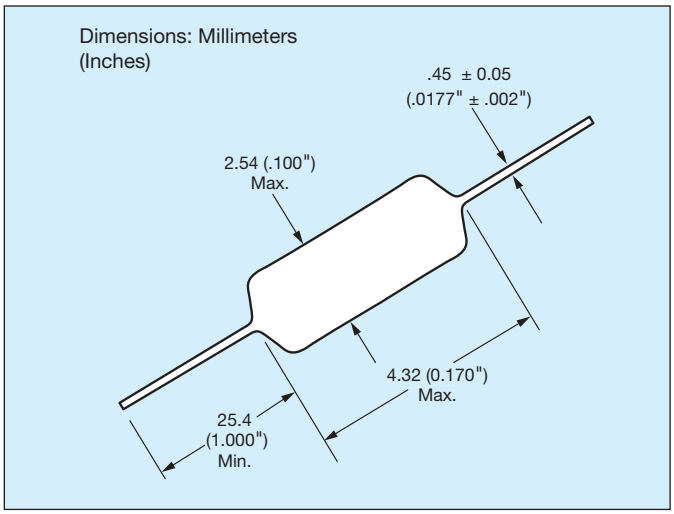

HOW TO ORDER

AA10	1	C	103	K	4	R
Component Size	Voltage Rating	Temperature Characteristic Code	Capacitance Code	Capacitance Tolerance Code	Failure Rate 4 = Automotive	RoHS Compliant

RoHS COMPLIANT

MARKING (EXAMPLE)

SpinGuard marking includes full date code/lot code identification. A first in the industry, this format provides complete traceability to all manufacturing processes involving the basic chip and final assembly. Total Shipment traceability is also provided.

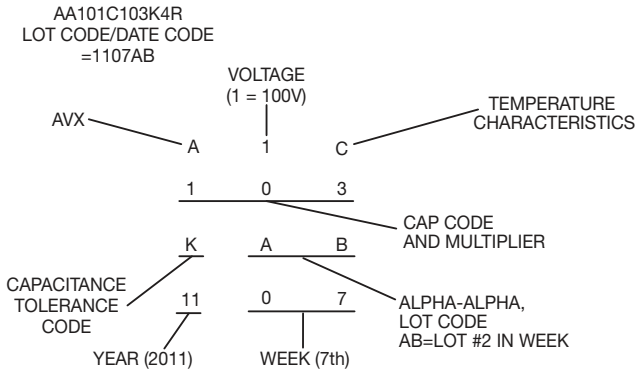

PACKAGING REQUIREMENTS

Tape and Reel Ø 14”: 7500 pieces

SIZE AND CAPACITANCE SPECIFICATIONS

Dimensions: Millimeters (Inches)

AVX Style		AA10			AA30	
Length (L)		4.32 (.170")			7.37 (.290")	
Diameter (D)		2.54 (.100")			3.81 (.150")	
Lead Diameter		.445 (.0175")			.445 (.0175")	
Lead Length		25.4 (1.00")			25.4 (1.00")	
Cap. in. pF	Typical AVX Part Nos.	WVDC 200	100	50	WVDC 100	50
100	AA_____A101K4R					
120	AA_____A121K4R					
150	AA_____A151K4R					
180	AA_____A181K4R					
220	AA_____A221K4R					
270	AA_____A271K4R					
330	AA_____A331K4R					
390	AA_____A391K4R					
470	AA_____A471K4R					
560	AA_____A561K4R					
680	AA_____A681K4R					
820	AA_____A821K4R					
1,000	AA_____A102K4R					
1,200	AA_____A122K4R					
1,500	AA_____A152K4R					
1,800	AA_____A182K4R					
2,200	AA_____A222K4R					
2,700	AA_____A272K4R					
3,300	AA_____A332K4R					
3,900	AA_____A392K4R					
4,700	AA_____A472K4R					
5,600	AA_____A562K4R					
6,800	AA_____A682K4R					
8,200	AA_____A822K4R					
10,000	AA_____A103K4R					

For other voltage and tolerances contact factory.

*Other capacitance values available upon special request.

SIZE AND CAPACITANCE SPECIFICATIONS

Dimensions: Millimeters (Inches)

	AVX Style	AA10		AA30	
	Length (L)	4.32 (.170")		7.37 (.290")	
	Diameter (D)	2.54 (.100")		3.81 (.150")	
	Lead Diameter	.445 (.0175")		.445 (.0175")	
	Lead Length	25.4 (1.00")		25.4 (1.00")	
Cap. in. pF	Typical AVX Part Nos.	WVDC 100	WVDC 50	WVDC 100	WVDC 50
220	AA__C221KAR				
270	AA__C271KAR				
330	AA__C331KAR				
390	AA__C391KAR				
470	AA__C471KAR				
560	AA__C561KAR				
680	AA__C681KAR				
820	AA__C821KAR				
1,000	AA__C102KAR				
1,200	AA__C122KAR				
1,500	AA__C152KAR				
1,800	AA__C182KAR				
2,200	AA__C222KAR				
2,700	AA__C272KAR				
3,300	AA__C332KAR				
3,900	AA__C392KAR				
,700	AA__C472KAR				
5,600	AA__C562KAR				
6,800	AA__C682KAR				
8,200	AA__C822KAR				
10,000	AA__C103KAR				
12,000	AA__C123KAR				
15,000	AA__C153KAR				
18,000	AA__C183KAR				
22,000	AA__C223KAR				
27,000	AA__C273KAR				
33,000	AA__C333KAR				
39,000	AA__C393KAR				
47,000	AA__C473KAR				
56,000	AA__C563KAR				
68,000	AA__C683KAR				
82,000	AA__C823KAR				
100,000	AA__C104KAR				

For other voltage and tolerances contact factory.

*Other capacitance values available upon special request.

Axial Leads/Ceralam®

GENERAL INFORMATION

AVX SA Series

Molded Axial Leaded MLC

Temperature Coefficients: C0G (NP0), X7R, Z5U
50V, 100V and 200V

Case Material: Molded Epoxy

Lead Material: Solderable

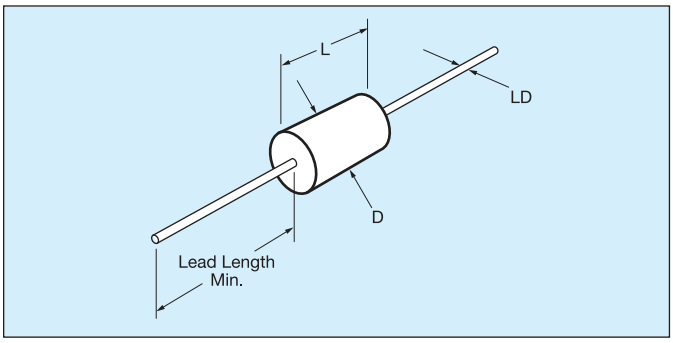

HOW TO ORDER

MA10 — **Molded Axial Size**
MA10
MA20
MA30
MA40
MA50
MA60

5 — **Voltage**
5 = 50V
1 = 100V
2 = 200V

E — **Dielectric**
A = C0G (NP0)
C = X7R
E = Z5U

104 — **Capacitance**
First two digits are the significant figures of capacitance. Third digit indicates the additional number of zeros. For example, order 100,000 pF as 104. (For values below 10pF use "R" in place of decimal point, e.g., 1R4 = 1.4pF.)

Z — **Capacitance Tolerance**
C0G (NP0):
F = ±1%
J = ±5%
K = ±10%
M = ±20%
D = ±0.5pF
<10pF only

X7R:
J = ±5%
K = ±10%
M = ±20%

Z5U:
M = ±20%
Z = +80%
-20%

A — **Failure Rate**
A = Not Applicable

R — **Leads**
A = Standard

Not RoHS Compliant

‡ C tolerance available C0G (NP0) from 1.0 to 9.1 pF only. Minimum tolerance for values 10 pF - 100 pF is D or F whichever is greater.

MARKING (EXAMPLE)

Line 1, A (for AVX), 5 = 50 Volts (V is optional),
E = TC Line 2, 104Z = Capacitance Code

Line 3, Tolerance, 2 digit Lot Code
Date Code: 8 = 2008
10 = Week

Four Digit Date Code Optional

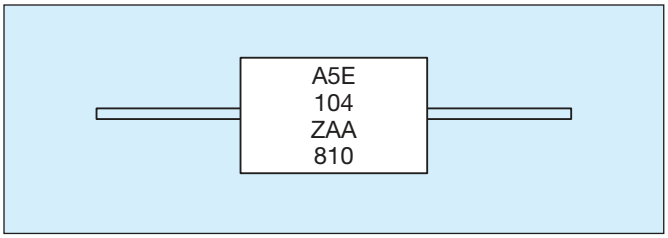

MILITARY CROSS REFERENCE AND DIMENSIONS GUIDE

Per MIL-Spec				Case Size		
AVX Style	MIL-C-11015	MIL-PRF-39014	MIL-PRF-20	Length (L)	Diameter (D)	Lead Diameter (LD)
MA10	CK12	CKR11	CCR75/CC75	4.07 ± .25 (.160" ± .010")	2.29 ± .25 (.090" ± .010")	.48 ± .05 (.019" ± .002")
MA20	CK13	CKR12	CCR76/CC76	6.35 ± .25 (.250" ± .010")	2.29 ± .25 (.090" ± .010")	.48 ± .05 (.019" ± .002")
MA40	CK14	CKR14	CCR77/CC77	9.91 ± .25 (.390" ± .010")	3.56 ± .25 (.140" ± .010")	.63 ± .05 (.025" ± .002")
MA50	CK15	CKR15	CCR78/CC78	12.7 ± .51 (.500" ± .020")	6.35 ± .38 (.250" ± .015")	.63 ± .05 (.025" ± .002")
MA60	CK16	CKR16	CCR79/CC79	17.53 ± .51 (.690" ± .020")	8.89 ± .51 (.350" ± .015")	.63 ± .05 (.025" ± .002")

For Military/Established Reliability Molded/Axial Lead see MIL-C-11015, MIL-PRF-39014, MIL-PRF-20 Section.

Dimensions: Millimeters (Inches)

Axial Leads/Ceralam®

C0G (NP0) Dielectric

SIZE AND CAPACITANCE SPECIFICATIONS

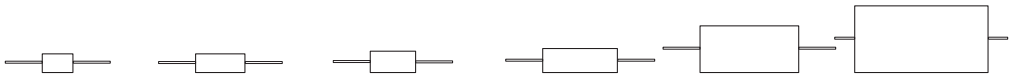

Dimensions: Millimeters (Inches)

	AVX Style	MA10			MA20			MA30			MA40			MA50			MA60		
	Length	4.07 ± .25 (.160" ± .010")			6.35 ± .25 (.250" ± .010")			6.09 ± .25 (.240" ± .010")			9.91 ± .25 (.390" ± .010")			12.7 ± .51 (.500" ± .020")			17.53 ± .51 (.690" ± .020")		
	Diameter	2.29 ± .25 (.090" ± .010")			2.29 ± .25 (.090" ± .010")			3.30 ± .25 (.130" ± .010")			3.56 ± .25 (.140" ± .010")			6.35 ± .38 (.250" ± .015")			8.89 ± .51 (.350" ± .015")		
	Lead Diameter	.48 ± .05 (.019" ± .002")			.48 ± .05 (.019" ± .002")			.48 ± .05 (.019" ± .002")			.63 ± .05 (.025" ± .002")			.63 ± .05 (.025" ± .002")			.63 ± .05 (.025" ± .002")		
	Lead Length	25.4 (1.00")			25.4 (1.00")			25.4 (1.00")			25.4 (1.00")			25.4 (1.00")			25.4 (1.00")		
Cap. in. pF	Typical AVX Part Nos.	WVDC 200	100	50	WVDC 200	100	50	WVDC 200	100	50	WVDC 200	100	50	WVDC 200	100	50	WVDC 200	100	50
1.0 to 9.1	MA____5A1R0DAA MA____5A9R1DAA	■	■	■															
10	MA____5A100KAA	■	■	■															
12	MA____5A120KAA	■	■	■															
15	MA____5A150KAA	■	■	■															
18	MA____5A180KAA	■	■	■															
22	MA____5A220KAA	■	■	■															
27	MA____5A270KAA	■	■	■															
33	MA____5A330KAA	■	■	■															
39	MA____5A390KAA	■	■	■															
47	MA____5A470KAA	■	■	■															
56	MA____5A560KAA	■	■	■															
68	MA____5A680KAA	■	■	■															
82	MA____5A820KAA	■	■	■	■	■	■												
100	MA____5A101KAA	■	■	■	■	■	■												
120	MA____5A121KAA	■	■	■	■	■	■	■	■	■									
150	MA____5A151KAA	■	■	■	■	■	■	■	■	■									
180	MA____5A181KAA	■	■	■	■	■	■	■	■	■	■	■	■						
220	MA____5A221KAA		■	■	■	■	■	■	■	■	■	■	■						
270	MA____5A271KAA		■	■	■	■	■	■	■	■	■	■	■						
330	MA____5A331KAA		■	■	■	■	■	■	■	■	■	■	■						
390	MA____5A391KAA		■	■		■	■	■	■	■	■	■	■						
470	MA____5A471KAA		■	■		■	■	■	■	■	■	■	■						
560	MA____5A561KAA		■	■		■	■	■	■	■	■	■	■						
680	MA____5A681KAA		■	■		■	■	■	■	■	■	■	■						
820	MA____5A821KAA		■	■		■	■	■	■	■	■	■	■						
1000	MA____5A102KAA			■		■	■	■	■	■	■	■	■	■	■	■			
1200	MA____5A122KAA					■	■		■	■	■	■	■	■	■	■			
1500	MA____5A152KAA						■		■	■	■	■	■	■	■	■			
1800	MA____5A182KAA						■		■	■	■	■	■	■	■	■			
2200	MA____5A222KAA								■	■		■	■	■	■	■			
2700	MA____5A272KAA								■	■		■	■	■	■	■			
3300	MA____5A332KAA								■	■		■	■	■	■	■	■	■	■
3900	MA____5A392KAA								■	■		■	■	■	■	■	■	■	■
4700	MA____5A472KAA								■	■		■	■	■	■	■	■	■	■
5600	MA____5A562KAA									■		■	■	■	■	■	■	■	■
6800	MA____5A682KAA											■	■	■	■	■	■	■	■
8200	MA____5A822KAA												■	■	■	■	■	■	■
10,000	MA____5A103KAA												■		■	■	■	■	■
12,000	MA____5A123KAA														■	■	■	■	■
15,000	MA____5A153KAA														■	■	■	■	■
18,000	MA____5A183KAA														■	■	■	■	■
22,000	MA____5A223KAA														■	■	■	■	■
27,000	MA____5A273KAA														■	■	■	■	■
33,000	MA____5A333KAA														■	■	■	■	■
39,000	MA____5A393KAA															■		■	■
47,000	MA____5A473KAA															■		■	■
56,000	MA____5A563KAA															■		■	■
68,000	MA____5A683KAA																	■	■
82,000	MA____5A823KAA																	■	■
100,000	MA____5A104KAA																		■
120,000	MA____5A124KAA																		■
150,000	MA____5A154KAA																		■

For other tolerances see Part No. Codes
For other voltages see Part No. Codes
AVX Style

Axial Leads/Ceralam®

X7R Dielectric

SIZE AND CAPACITANCE SPECIFICATIONS

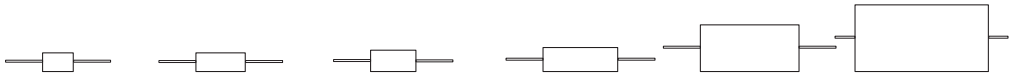

Dimensions: Millimeters (Inches)

	AVX Style	MA10			MA20			MA30			MA40			MA50			MA60		
	Length	4.07 ± .25 (.160" ± .010")			6.35 ± .25 (.250" ± .010")			6.09 ± .25 (.240" ± .010")			9.91 ± .25 (.390" ± .010")			12.7 ± .51 (.500" ± .020")			17.53 ± .51 (.690" ± .020")		
	Diameter	2.29 ± .25 (.090" ± .010")			2.29 ± .25 (.090" ± .010")			3.30 ± .25 (.130" ± .010")			3.56 ± .25 (.140" ± .010")			6.35 ± .38 (.250" ± .015")			8.89 ± .51 (.350" ± .015")		
	Lead Diameter	.48 ± .05 (.019" ± .002")			.48 ± .05 (.019" ± .002")			.48 ± .05 (.019" ± .002")			.63 ± .05 (.025" ± .002")			.63 ± .05 (.025" ± .002")			.63 ± .05 (.025" ± .002")		
	Lead Length	25.4 (1.00")			25.4 (1.00")			25.4 (1.00")			25.4 (1.00")			25.4 (1.00")			25.4 (1.00")		
Cap. in. pF	Typical AVX Part Nos.	WVDC			WVDC			WVDC			WVDC			WVDC			WVDC		
		200	100	50	200	100	50	200	100	50	200	100	50	200	100	50	200	100	50
220	MA____5C221KAA																		
270	MA____5C271KAA																		
330	MA____5C331KAA																		
390	MA____5C391KAA																		
470	MA____5C471KAA																		
560	MA____5C561KAA																		
680	MA____5C681KAA																		
820	MA____5C821KAA																		
1000	MA____5C102KAA																		
1200	MA____5C122KAA																		
1500	MA____5C152KAA																		
1800	MA____5C182KAA																		
2200	MA____5C222KAA																		
2700	MA____5C272KAA																		
3300	MA____5C332KAA																		
3900	MA____5C392KAA																		
4700	MA____5C472KAA																		
5600	MA____5C562KAA																		
6800	MA____5C682KAA																		
8200	MA____5C822KAA																		
10,000	MA____5C103KAA																		
12,000	MA____5C123KAA																		
15,000	MA____5C153KAA																		
18,000	MA____5C183KAA																		
22,000	MA____5C223KAA																		
27,000	MA____5C273KAA																		
33,000	MA____5C333KAA																		
39,000	MA____5C393KAA																		
47,000	MA____5C473KAA																		
56,000	MA____5C563KAA																		
68,000	MA____5C683KAA																		
82,000	MA____5C823KAA																		
100,000	MA____5C104KAA																		
120,000	MA____5C124KAA																		
150,000	MA____5C154KAA																		
180,000	MA____5C184KAA																		
220,000	MA____5C224KAA																		
270,000	MA____5C274KAA																		
330,000	MA____5C334KAA																		
390,000	MA____5C394KAA																		
470,000	MA____5C474KAA																		
560,000	MA____5C564KAA																		
680,000	MA____5C684KAA																		
820,000	MA____5C824KAA																		
1.0 µF	MA____5C105KAA																		
1.2 µF	MA____5C125KAA																		
1.5 µF	MA____5C155KAA																		
1.8 µF	MA____5C185KAA																		
2.2 µF	MA____5C225KAA																		
2.7 µF	MA____5C275KAA																		
3.3 µF	MA____5C335KAA																		
3.9 µF	MA____5C395KAA																		

For other tolerances see Part No. Codes
For other voltages see Part No. Codes
AVX Style

Axial Leads/Ceralam®

Z5U Dielectric

SIZE AND CAPACITANCE SPECIFICATIONS

Dimensions: Millimeters (Inches)

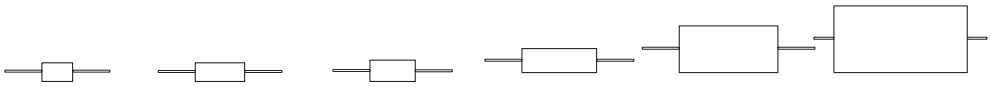

AVX Style	MA10			MA20			MA30			MA40			MA50			MA60		
Length	4.07 ± .25 (.160" ± .010")			6.35 ± .25 (.250" ± .010")			6.09 ± .25 (.240" ± .010")			9.91 ± .25 (.390" ± .010")			12.7 ± .51 (.500" ± .020")			17.53 ± .51 (.690" ± .020")		
Diameter	2.29 ± .25 (.090" ± .010")			2.29 ± .25 (.090" ± .010")			3.30 ± .25 (.130" ± .010")			3.56 ± .25 (.140" ± .010")			6.35 ± .38 (.250" ± .015")			8.89 ± .51 (.350" ± .015")		
Lead Diameter	.48 ± .05 (.019" ± .002")			.48 ± .05 (.019" ± .002")			.48 ± .05 (.019" ± .002")			.63 ± .05 (.025" ± .002")			.63 ± .05 (.025" ± .002")			.63 ± .05 (.025" ± .002")		
Lead Length	25.4 (1.00")			25.4 (1.00")			25.4 (1.00")			25.4 (1.00")			25.4 (1.00")			25.4 (1.00")		
Cap. in. pF / Typical AVX Part Nos.	WVDC			WVDC			WVDC			WVDC			WVDC			WVDC		
	200	100	50	200	100	50	200	100	50	200	100	50	200	100	50	200	100	50
1000 MA____5E102ZAA																		
1200 MA____5E122ZAA																		
1500 MA____5E152ZAA																		
1800 MA____5E182ZAA																		
2200 MA____5E222ZAA																		
2700 MA____5E272ZAA																		
3300 MA____5E332ZAA																		
3900 MA____5E392ZAA																		
4700 MA____5E472ZAA																		
5600 MA____5E562ZAA																		
6800 MA____5E682ZAA																		
8200 MA____5E822ZAA																		
10,000 MA____5E103ZAA																		
12,000 MA____5E123ZAA																		
15,000 MA____5E153ZAA																		
18,000 MA____5E183ZAA																		
22,000 MA____5E223ZAA																		
27,000 MA____5E273ZAA																		
33,000 MA____5E333ZAA																		
39,000 MA____5E393ZAA																		
47,000 MA____5E473ZAA																		
56,000 MA____5E563ZAA																		
68,000 MA____5E683ZAA																		
82,000 MA____5E823ZAA																		
100,000 MA____5E104ZAA																		
120,000 MA____5E124ZAA																		
150,000 MA____5E154ZAA																		
180,000 MA____5E184ZAA																		
220,000 MA____5E224ZAA																		
270,000 MA____5E274ZAA																		
330,000 MA____5E334ZAA																		
390,000 MA____5E394ZAA																		
470,000 MA____5E474ZAA																		
560,000 MA____5E564ZAA																		
680,000 MA____5E684ZAA																		
820,000 MA____5E824ZAA																		
1.0 µF MA____5E105ZAA																		
1.2 µF MA____5E125ZAA																		
1.5 µF MA____5E155ZAA																		
1.8 µF MA____5E185ZAA																		
2.2 µF MA____5E225ZAA																		
2.7 µF MA____5E275ZAA																		
3.3 µF MA____5E335ZAA																		
3.9 µF MA____5E395ZAA																		
4.7 µF MA____5E475ZAA																		
5.6 µF MA____5E565ZAA																		
6.8 µF MA____5E685ZAA																		
8.2 µF MA____5E825ZAA																		

For other tolerances see Part No. Codes
For other voltages see Part No. Codes
AVX Style

Axial Leads/Packaging

TAPE AND REEL

CLASS I / RS-296	
A.	5mm ± 0.5mm (.200” ± 0.020”)
B*.	52.4mm ± 1.5mm (2.063” ± 0.059”)
C.	6.35mm ± 0.4mm (0.250” ± 0.016”)
D1-D2.	1.4mm (0.055” MAX.)
E.	1.2mm (0.047” MAX.)
F.	1.6mm (0.063” MAX.)
G.	356mm (14.00”)
H.	76mm (3.000”)
I.	25.4mm (1.000”)
J.	84mm (3.300”)
K.	70mm (2.750”)

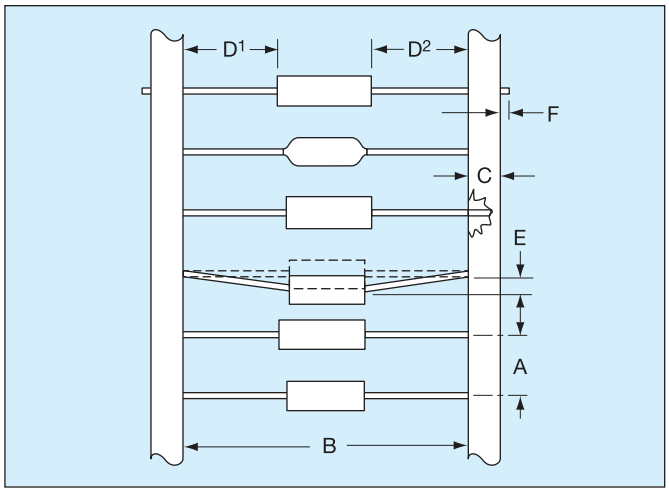

Leader Tape: 300mm min. (12”)
Splicing: Tape Only
Missing Parts: 0.25% of component count max.-
No consecutive missing parts

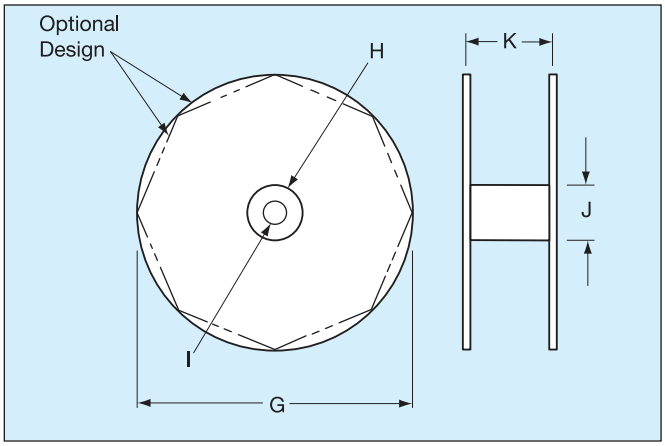

REEL QUANTITIES (MAX.) ‡

SA05	7,500 pcs.	MA10	5,000 pcs.
SA10	7,500 pcs.	MA20	5,000 pcs.
SA11	5,000 pcs.	MA30	3,000 pcs.
SA20	5,000 pcs.	MA40	3,000 pcs.
SA30	5,000 pcs.	MA50	950 pcs.
SA40	5,000 pcs.	MA60	650 pcs.

‡ 1000 pc. reels available for distribution pack only in ±1% and ±2% tolerance.

* Standard Tape Spacing Shown. Also available in 26.0mm + 1.5mm, – 0mm, (1.023 in. + .059 in. -0 in.) for SpinGuards only. EIA Class I, II and III tape spacings are available for molded axials. Tape spacing for Class II is 63.5mm ± 1.5mm (2.50 in ± .059 in), and for Class III 73mm ± 1.5mm (2.87 in ± .059 in)

ADDITIONAL PACKAGING AVAILABLE

AMMO PACK

Tape Spacing	SA05, SA10 SA20	SA11 SA30	SA40	BOX SIZES (Nominal)		
				L	W	H
52.4mm ± 1.5mm (2.062” ± .059”)	4,000 pcs.	2000	2,000 pcs.	255mm (10.039”)	73mm (2.874”)	93mm (3.661”)
26.0mm + 1.5mm - 0mm (1.023” + .059” - 0”)	4,000 pcs.*	2000	2,000 pcs.*	255mm (10.039”)	48mm (1.889”)	113mm (4.448”)

*SpinGuard only

BULK PACK (MOLDED AXIALS ONLY)

MA10 MA20 MA30 MA40	100 pcs. (bag)
MA50 MA60	50 pcs. (bag)