ST-90u / ST-70u

Analog Meters

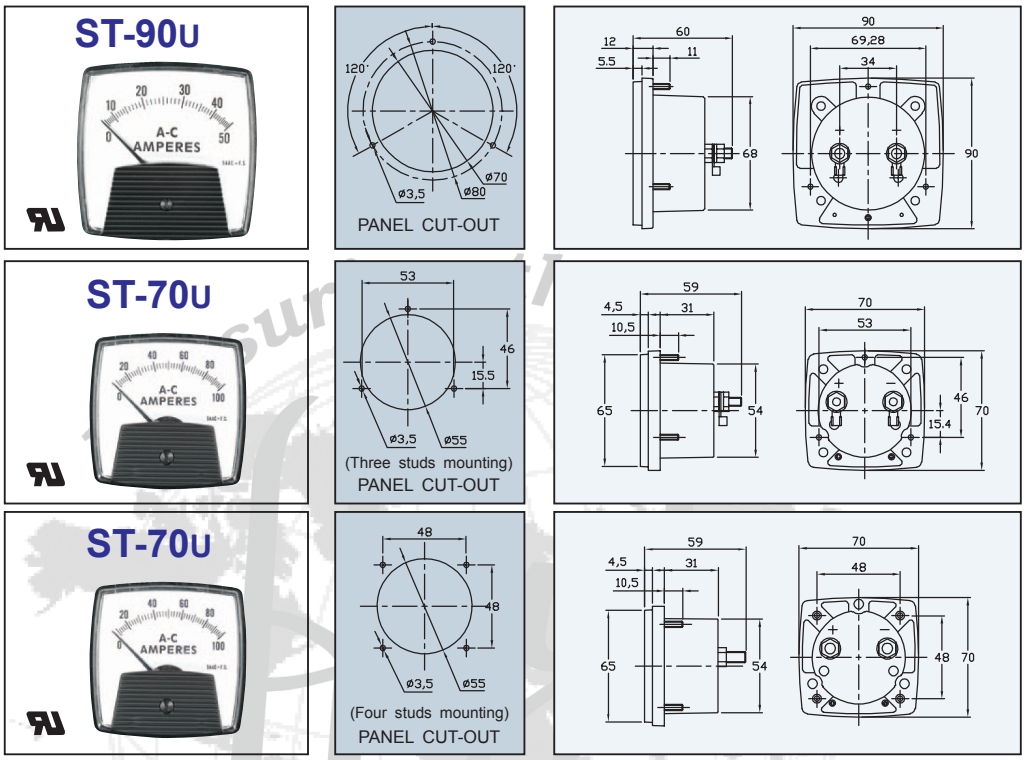

File No. E205138
Project No. 00CA03127

- **Case And Composition** : Acrylic resin front and bakelite case.
  Three studs mounting.
- **Accuracy** : AC class 2.0
  DC class 2.0
  Rectifier class 2.0
- **Color** : Black case and white scale plate.
- **Pointer** : Sword type color in black.

Measuring Ranges :

Moving Coil Type

DC uA	DC mA		DC A	DC mV	DC V	
50	1	200	1	50	3	200
100	2	250	1.5	60	5	300
150	5	300	10	100	10	500
200	10	500	20	500	20	600
250	20	800	30		30	
300	50				50	
500	100				100	
800	150				150	

Moving Iron Type

AC mA	AC A	AC V
50	1	150
100	5	250
150	10	300
200	15	500
250	20	
300	30	
500	50	
800		

Rectifier Type

AC V
30
50
100
150
200
300
500

- **Hz Meter** :
  Measuring Ranges : 45-65Hz,45-55Hz,55-65Hz
  Rated Voltage : 110V, 220V
  Accuracy : Class 2.0
  Consumption : Max.15 mA
  Test Voltage : 2kV. 50-60Hz

Hoyt Electrical Instrument Works Inc.
23 Meter Street
Penacook, NH 03303

Phone: (800) 258-3652
Fax: (603) 753-9592
Email: sales@hoytmeter.com

www.hoytmeter.com