THIS DRAWING IS UNPUBLISHED. RELEASED FOR PUBLICATION - ,- .
© COPYRIGHT - By - ALL RIGHTS RESERVED.

LOC	DIST
CM	0

REVISIONS

P	LTR	DESCRIPTION	DATE	DWN	APVD
	R1	REVISED PER ECO-11-004917	11MAR11	RK	HMR

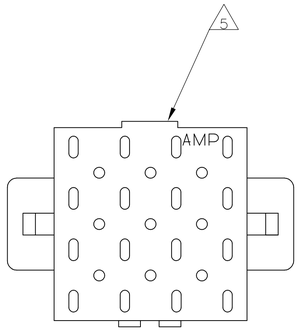

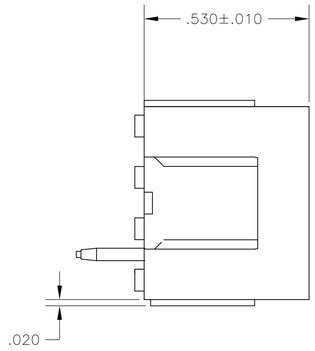

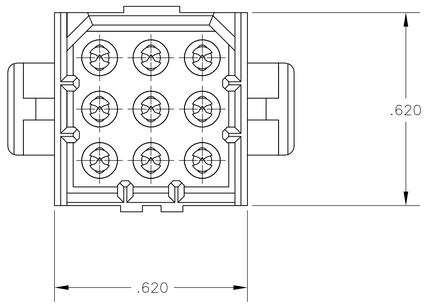

1. FITS SOCKET HOUSING 640521.
2. ASSEMBLY CONFORMS TO AMP SOLDERABILITY SPEC. 109-11-3.
3. FOR USE WITH .063 THICK P.C. BOARD.
4. CONTACT IS PLATED OVERALL WITH.000050 NICKEL, THEN .000030 GOLD OVER CONTACT LENGTH INDICATED AND .000150 MATTE TIN-LEAD ON SOLDER TAIL END.
5. UL AND CSA LOGO LOCATED ON THIS SURFACE.
6. FOR USE WITH .120 THICK P.C. BOARD.
7. CONTACT IS PLATED OVERALL WITH.000050 NICKEL, THEN .000030 GOLD OVER CONTACT LENGTH INDICATED AND .000150 MATTE TIN ON SOLDER TAIL END.

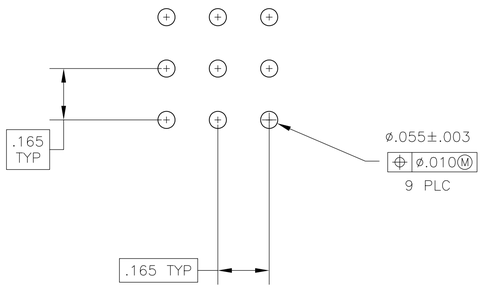

RECOMMENDED P.C. BOARD LAYOUT

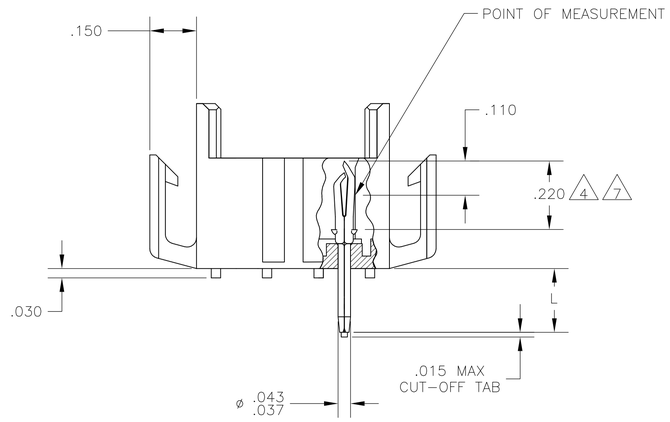

.210 6	BRICK RED	GOLD 7	2-640501-4
.150 3	BRICK RED	GOLD 7	2-640501-2
.210 6	BRICK RED	GOLD 4	640501-4
.210 6	BRICK RED	PRE-TIN	640501-3
.150 3	BRICK RED	GOLD 4	640501-2
.150 3	BRICK RED	PRE-TIN	640501-1
"L" +.010 -.020	HOUSING COLOR	PIN FINISH	PART NUMBER

.008	0.20	.037	0.94	.150	3.81	.620	15.75
.005	0.13	.030	0.76	.110	2.79	.530	13.46
.003	0.08	.020	0.51	.063	1.60	.220	5.59
.000050	0.00127	.015	0.38	.055	1.40	.210	5.33
.000030	0.00076	.010	0.25	.043	1.09	.165	4.19
IN	MM	IN	MM	IN	MM	IN	MM

CONVERSION TABLE

METRIC

THIS DRAWING IS A CONTROLLED DOCUMENT.

DIMENSIONS: INCHES

TOLERANCES UNLESS OTHERWISE SPECIFIED:
0 PLC ± -
1 PLC ± -
2 PLC ± -
3 PLC ± .005
4 PLC ± -
ANGLES ± 0° 30'

MATERIAL: HOUSING FLAME RETARDANT NYLON, UL 94V-0. PIN, .008 PH BRZ.

FINISH: SEE FINISH

DWN J. HUFFMAN 28 APR 98
CHK R. SWING 28 APR 98
APVD T. BEDDICK 28 APR 98
PRODUCT SPEC —
APPLICATION SPEC —
WEIGHT —

TE Connectivity

NAME: HEADER ASSEMBLY, PIN, 9 POSITION MR.

SIZE	CAGE CODE	DRAWING NO	RESTRICTED TO
A1	00779	C-640501	—

CUSTOMER DRAWING | SCALE 4:1 | SHEET 1 OF 1 | REV R1

4805 (3/11)