Alle Rechte vorbehalten/ *All rights reserved*

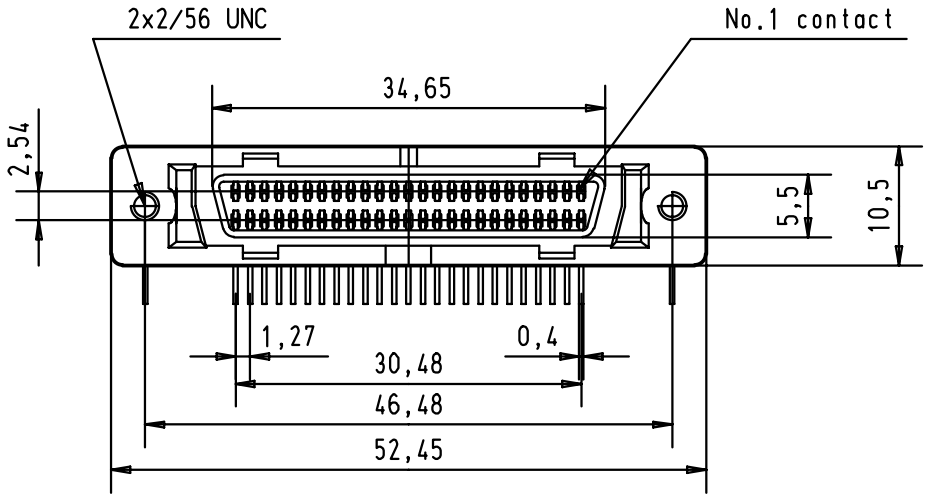

Printed Board Layout
component side

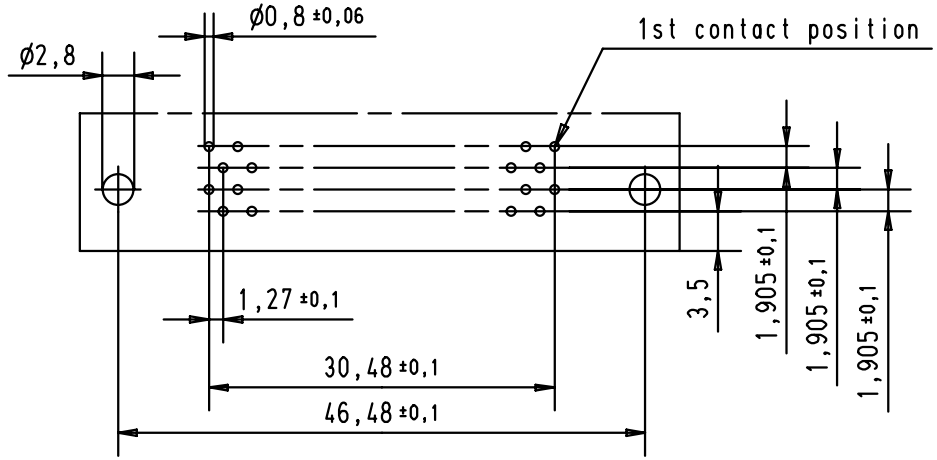

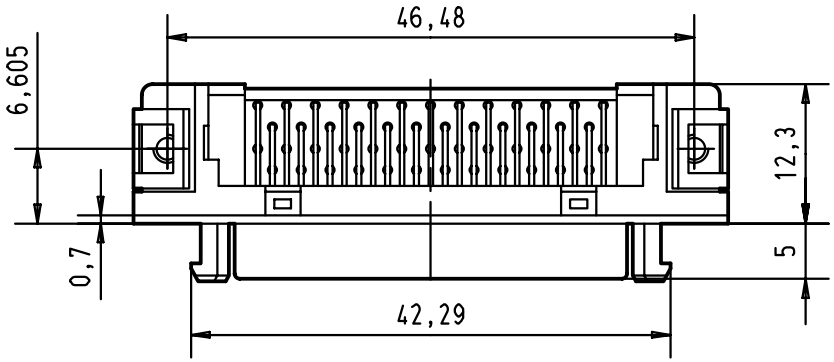

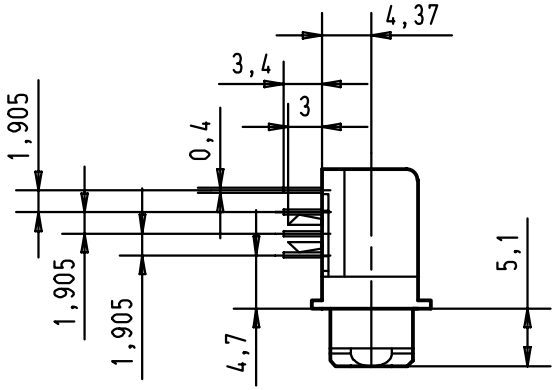

				Dat.	Name		
			Detail.	30-AUG-00	Alspace	All Dim. in mm Orig. Size DIN A 4	
			Insp.				
			Stand.				
27941	30-AUG-00	Alspace	HARTING EURL F-95972 Paris			TB 60 01 050 5141	
Mod.	Dat.	Name				Sub.	

har.mik® I/O pin/socket
female 50 poles connector
with angled solder pins
clips and fixed latching .screw 2/56 UNC

Maßstab/ *Scale* 1.5:1

Blatt/ *Page* 1/1