THIS DRAWING IS UNPUBLISHED. RELEASED FOR PUBLICATION -,- .
© COPYRIGHT - By - ALL RIGHTS RESERVED.

| LOC | DIST |
|---|---|
| AF | 50 |

REVISIONS

| P | LTR | DESCRIPTION | DATE | DWN | APVD |
|---|---|---|---|---|---|
| | J | REVISED PER ECR-13-011489 | 04DEC2013 | KH | PD |

1 SUPPLIED IN LOOSE PIECE.

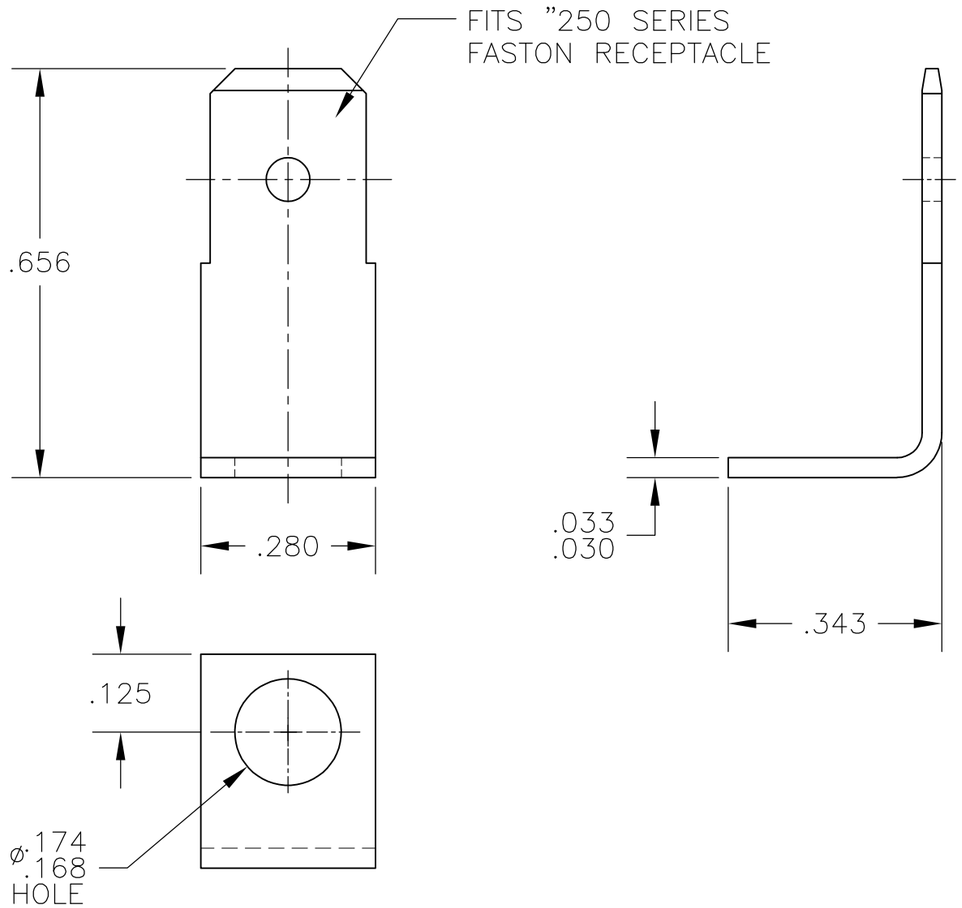


| | | | |
|---|---|---|---|
| OBSOLETE | ~~–~~ | ~~.032 STEEL~~ | ~~62314-3~~ |
| | TIN | BRASS | 62314-2 |
| OBSOLETE | ~~NICKEL~~ | ~~.032 STEEL~~ | ~~62314-1~~ |
| | FINISH | MATERIAL | PART NO |

THIS DRAWING IS A CONTROLLED DOCUMENT.

DIMENSIONS: INCHES

TOLERANCES UNLESS OTHERWISE SPECIFIED:

| | |
|---|---|
| 0 PLC | ± – |
| 1 PLC | ± – |
| 2 PLC | ± .015 |
| 3 PLC | ± – |
| 4 PLC | ± – |
| ANGLES | ± 1° |

MATERIAL: SEE TABLE

FINISH: SEE TABLE

DWN JR RUTH 10/9/91
CHK MS FEHER 10/9/91
APVD R BEAVER 10/9/91
PRODUCT SPEC —
APPLICATION SPEC —
WEIGHT —

TE Connectivity

NAME: .250 SERIES FASTON TAB

| SIZE | CAGE CODE | DRAWING NO | RESTRICTED TO |
|---|---|---|---|
| A3 | 00779 | C-62314 | — |

CUSTOMER DRAWING

| SCALE | SHEET | REV |
|---|---|---|
| 5:1 | 1 OF 1 | J |