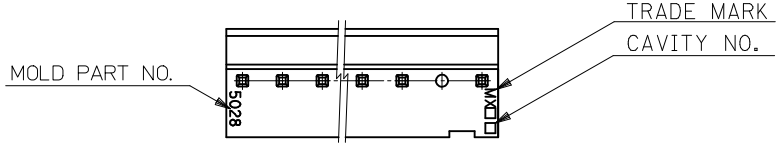

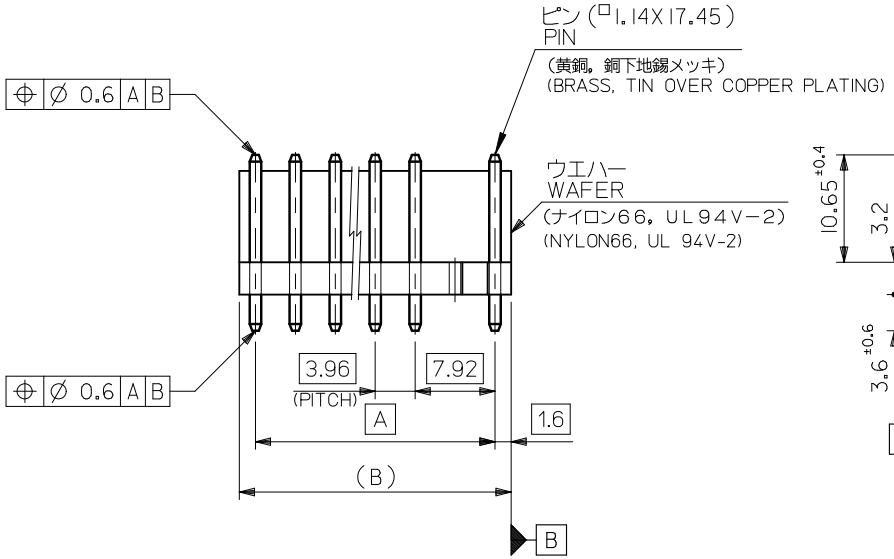

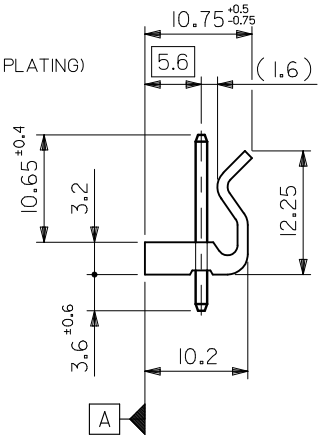

注記
NOTE

1. ウエハーのそりは，長さ25．4に対して0．24MAX。
CAMBER MUST BE 0.24 MAX. PER 25.4.

(公差非累積)
(NON-ACCUMULATIVE)

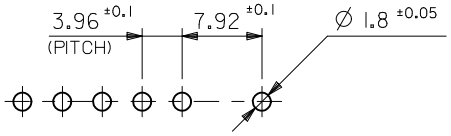

基板取付穴推奨寸法
RECOMMENDED P.C.BOARD HOLE DIMENSION

B	A	オーダー番号 (EDP NO.) ORDER NO. (EDP NO.)	ENG. NO.	極数 CKTS.
50.72	47.52	09-65-2129	5277-12A	12
46.76	43.56	-2119	-11A	11
42.8	39.6	-2109	-10A	10
38.84	35.64	-2099	-09A	9
34.88	31.68	-2089	-08A	8
30.92	27.72	-2079	-07A	7
26.96	23.76	-2069	-06A	6
23	19.8	-2059	-05A	5
19.04	15.84	-2049	-04A	4
15.08	11.88	-2039	-03A	3
11.12	7.92	09-65-2029	5277-02A	2

REVISED
EC NO: J2009-2884 2009/06/24
DRWN:YSHIBATA 2010/03/15
CH'KD:THARUYAMA 2010/03/15
APPR:NUKITA 2010/03/15
DESCRIPTION
REV

GENERAL TOLERANCES (UNLESS SPECIFIED)

10 UNDER	±0.2
10 OVER 30 UNDER	±0.25
30 OVER	±0.3
ANGULAR ±3 °	

DRAFT WHERE APPLICABLE MUST REMAIN WITHIN DIMENSIONS

DIMENSION STYLE: MM ONLY
SCALE: 2:1
DESIGN UNITS: METRIC
THIRD ANGLE PROJECTION

DRAWN BY: H.HIRAMOTO DATE: '88/09/29
CHECKED BY: M.FUKUSHIMA DATE: '91/06/26
APPROVED BY: M.ENOMOTO DATE: '91/06/26

TITLE: KK 3.96/7.92 WAFER ASSY WITH LOCK

MOLEX INCORPORATED

MATERIAL NO.: SEE TABLE
DOCUMENT NO.: SD-5277-001
SHEET NO.: 1 OF 1
SIZE: A3

THIS DRAWING CONTAINS INFORMATION THAT IS PROPRIETARY TO MOLEX INCORPORATED AND SHOULD NOT BE USED WITHOUT WRITTEN PERMISSION