| REV. | DATE | DESCRIPTION |
|---|---|---|
| A | 05/01/04 | UPDATE DRAWING FORMAT |

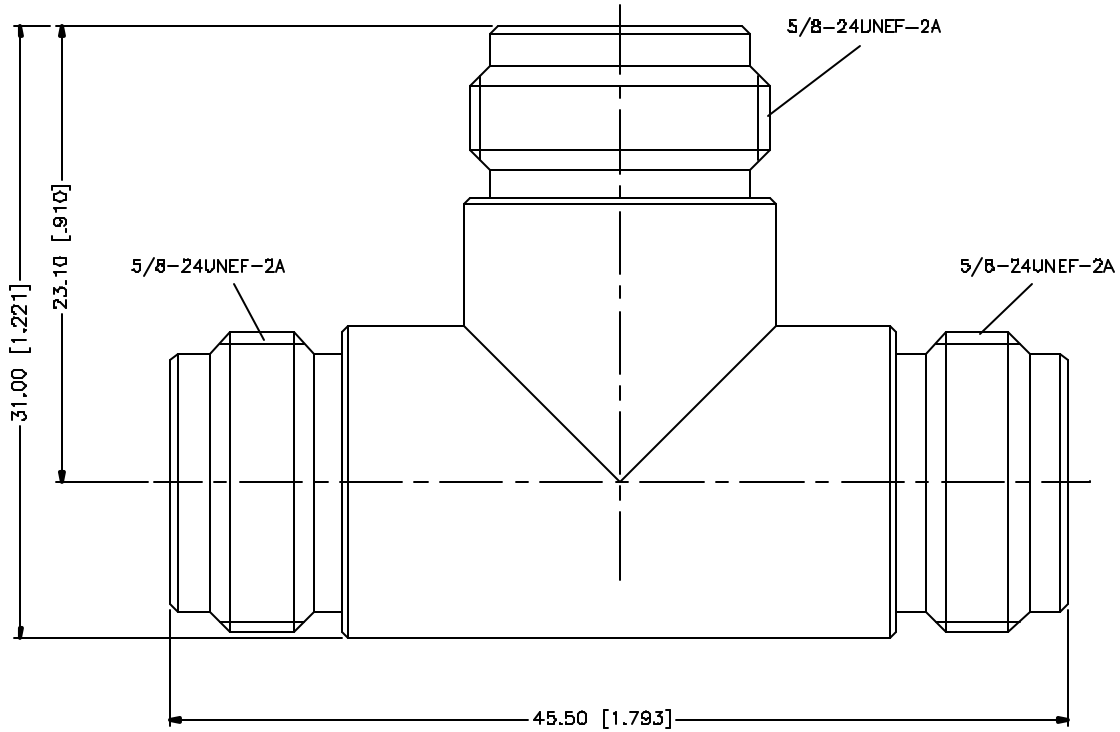


| | DESCRIPTION | MATERIAL | FINISH | QTY |
|---|---|---|---|---|
| 8 | | | | |
| 7 | | | | |
| 6 | | | | |
| 5 | | | | |
| 4 | | | | |
| 3 | CONTACT PIN | PHOS. BRONZE | GOLD | 1 |
| 2 | INSULATOR | TEFLON | NATURAL | 1 |
| 1 | HOUSING/BODY | BRASS | NEXCOTE | 1 |

UNLESS OTHERWISE SPECIFIED DIMENSIONS ARE IN MILLIMETERS. DIMENSIONS IN [ ] ARE IN INCHES AND FOR CUSTOMER REFERANCE ONLY.

UNLESS OTHERWISE SPECIFIED TOLERANCES FOR MILLIMETERS ARE:
0.5 – 8mm ± 0.20mm
8 – 30mm ± 0.40mm
30 – 120mm ± 0.50mm

UNLESS OTHERWISE SPECIFIED TOLERANCES FOR INCHES ARE:
.020 – .315 = ± 0.007"
.315 – 1.180 = ± 0.015"
1.180 – 4.724 = ± 0.020"

DO NOT SCALE DRAWING

| APPROVALS | | DATE |
|---|---|---|
| DRAWN | C.R.S. | 05/01/04 |
| CHECKED | | |
| ISSUED | | |
| SHEET | 1 OF 1 | |
| | | |

CAD FILE C:/172/172127.DWG

**Amphenol Connex**

PART DESCRIPTION: N "T" ADAPTER JACK-JACK-JACK

PART NO. 172127

| DWG. NO. | REV. | SIZE | SCALE |
|---|---|---|---|
| 172127.DWG | A | A | NA |