THIS DRAWING IS UNPUBLISHED. RELEASED FOR PUBLICATION ,19 .
© COPYRIGHT 19 BY AMP INCORPORATED. ALL RIGHTS RESERVED.

LOC	DIST
CM	53

REVISIONS

P	LTR	DESCRIPTION	DATE	DWN	APVD
	0	RELEASED PER NPR 99-	12MAY99	AH	CC

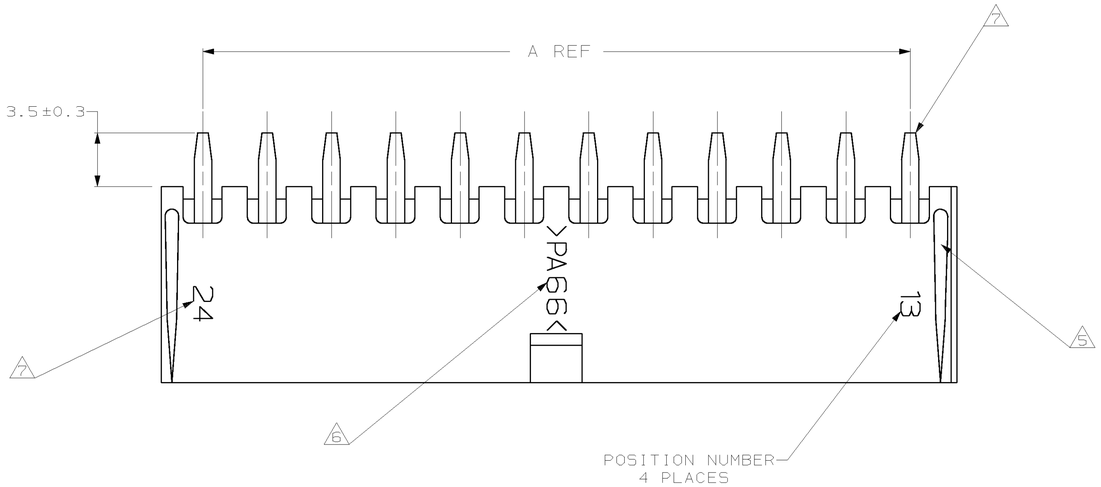

1. MATERIAL: HOUSING - NYLON, UL94V-2 (COLOR - NATURAL, COLOR OF PARTS MAY VARY).
   CONTACTS - 0.25 THK COPPER ALOY.
2. CONTACT FINISH: 0.003 MIN THK TIN-LEAD OVER 0.00127 MIN THK NICKEL OVER ENTIRE CONTACT.
3. SOLDER TAIL MEETS AMP SOLDERABILITY SPECIFICATION 109-11-2.
4. MATES WITH SIMILARLY PLATED AMP-DUAC™ POWER CONNECTOR RECEPTACLE HOUSINGS/SOCKET CONTACTS.
5. RIBS ON FOUR CORNERS OPTIONAL.
6. AMP LOGO AND MATERIAL ID MAY BE LOCATED ON EITHER LONG SIDE OF PART.
7. SIZE, SHAPE OR STYLE OF THIS FEATURE MAY VARY.

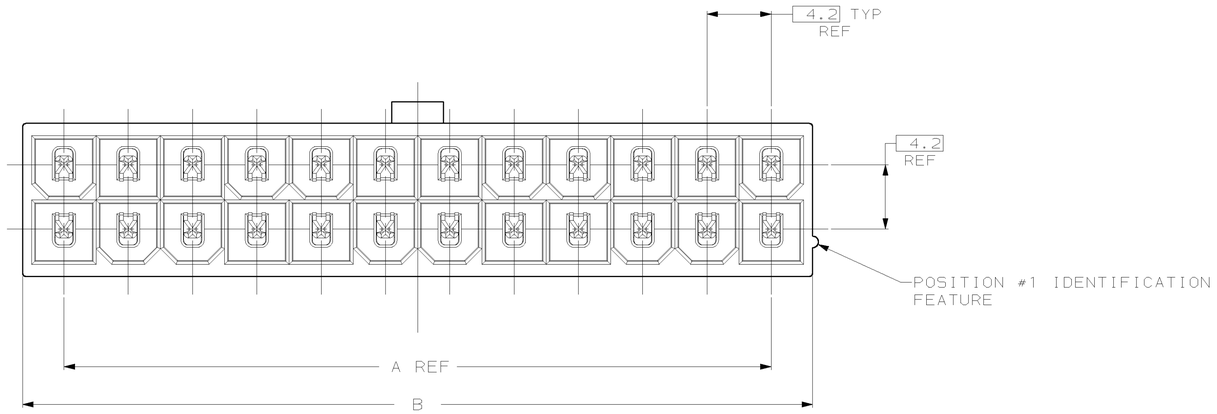

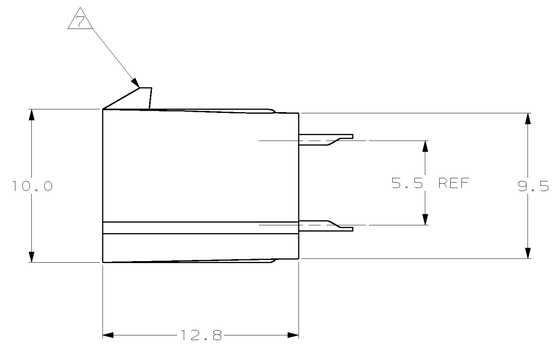

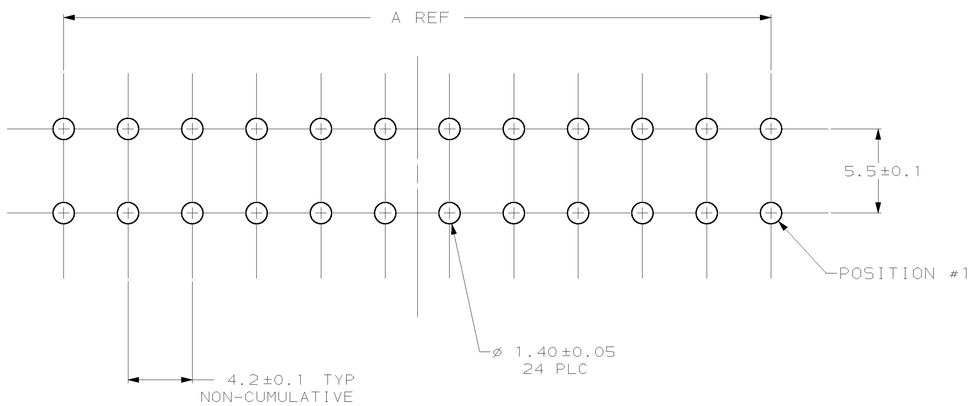

RECOMMENDED MOUNTING HOLE PATTERN
FOR 1.78 MAX THICK P.C. BOARD
COMPONENT SIDE SHOWN

B	A	NO. OF POSITIONS	PART NO
51.6	46.2	24	2-794664-4
47.4	42.0	22	2-794664-2
43.2	37.8	20	2-794664-0
39.0	33.6	18	1-794664-8
34.8	29.4	16	1-794664-6
30.6	25.2	14	1-794664-4
26.4	21.0	12	1-794664-2
22.2	16.8	10	1-794664-0
18.0	12.6	8	794664-8
13.8	8.4	6	794664-6
9.6	4.2	4	794664-4
5.4	0.0	2	794664-2

THIS DRAWING IS A CONTROLLED DOCUMENT.

DIMENSIONS: mm

TOLERANCES UNLESS OTHERWISE SPECIFIED.
0 PLC ±-
1 PLC ±0.2
2 PLC ±0.13
3 PLC ±-
4 PLC ±-
ANGLES ±0°30'

MATERIAL 1 FINISH 2

METRIC

DWN A.HOLT 12 MAY 99
CHK C.CASH 12 MAY 99
APVD C.CASH 12 MAY 99
PRODUCT SPEC 108-1699
APPLICATION SPEC –
WEIGHT –

AMP Incorporated
Harrisburg, PA 17105-3608

NAME ASSEMBLY, HEADER, VERTICAL, TIN-LEAD PLATED, W/O PEGS, W/O DRAIN HOLES, 94V-2, AMP-DUAC™ POWER CONNECTOR

SIZE	CAGE CODE	DRAWING NO	RESTRICTED TO
A1	00779	C-794664	–

CUSTOMER DRAWING SCALE 5:1 SHEET 1 OF 1 REV 0