64AT43 SERIES CHART 1

CATALOG LISTING	KEYWAY POSITION		CENTER POSITION		OPPOSITE KEYWAY POSITION	
	C-NO	C-NC	C-NO	C-NC	C-NO	C-NC
64AT43-1	3,4	1,2	NONE	ALL	1,2	3,4
64AT43-3	3,4	1,2	N/A (7)	N/A (7)	1,2	3,4
64AT43-5	3,4*	1,2*	NONE	ALL	1,2	3,4
64AT43-7	3,4*	1,2*	NONE	ALL	1,2*	3,4*
64AT43-514	3,4	1,2	NONE	ALL	1,2*	3,4*

* ASTERISK DENOTES MOMENTARY POSITION

KEYWAY POSITION	CENTER POSITION (WHERE APPLICABLE)	OPPOSITE KEYWAY POSITION
SWITCHES 1 & 2	SWITCHES 1, 2, 3 & 4	SWITCHES 3 & 4
SWITCHES 3 & 4		SWITCHES 1 & 2

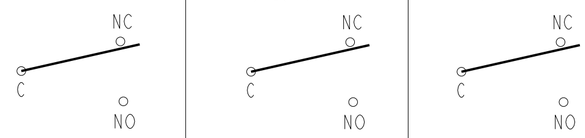

SPECIFICATION DETAILS:	
STANDARD:	BASIC SWITCHES CONFORM TO (MIL-PRF-8805/98) EXCEPT AS NOTED
CONSTRUCTION:	
ENCLOSURE DESIGN	UNSEALED
CONTACT MATERIAL & CONFIGURATION	GOLD BIFURCATED CONTACTS
CIRCUIT CONFIGURATION	4X S.P.D.T.
TERMINATION	H58 TYPE TERMINALS/CONNECTOR
WEIGHT	.075 LBS MAX
ELECTRICAL CHARACTERISTICS:	
ELECTRICAL RATINGS (MAX LOAD)	VOLTAGE / INDUCTIVE / RESISTIVE
-SEA LEVEL	28 VDC .010 AMP .010 AMP
-50,000 FEET	28 VDC .010 AMP .010 AMP
DIELECTRIC STRENGTH & INSULATION RES (BASIC SWITCH)	DIELECTRIC STRENGTH (≈ 60 Hz FOR 5 SEC) / INSULATION RESISTANCE (500 VDC ±10%)##
-BETWEEN TERMINALS AND EXPOSED NON-CURRENT CARRYING METAL	(SL)1000V RMS, 500 A (MAX LKG) (50,000 FT) 400VRMS# / 1000 MEGAOHM MIN
-BETWEEN TERMINALS OF MUTUALLY INSULATED CIRCUITS	(SL)1000V RMS, 500 A (MAX LKG) (50,000 FT) 400VRMS# / 1000 MEGAOHM MIN
-BETWEEN ALL UNCONNECTED TERMINALS OF THE SAME POLE	(SL)1000V RMS, 500 A (MAX LKG) (50,000 FT) 400VRMS# / 1000 MEGAOHM MIN
SWITCH RESISTANCE	N/A
RECOMMENDATION OR USE IN APPL LESS THAN .5 amps AND/OR 12 volts	ACCEPTABLE
MECHANICAL CHARACTERISTICS:	
OPERATING FORCE	1.0-5.0 LB (APPLIED .125±030 FROM END OF LEVER
MOUNTING STRENGTH	25 IN-LBS MAX PER MIL-PRF-8805D
ACTUATOR STRENGTH	25 LBS MAX PER MIL-PRF-8805D
LIFE:	
MECHENICAL LIFE	100,000 MIN PER MIL-PRF-8805D
ELECTRICAL LIFE AT FULL RATED LOAD	25,000 MIN PER MIL-PRF-8805D
ENVIRONMENTAL:	
TEMPERATURE RANGE	-55° C TO +85° C
ALTITUDE RANGE	SEA LEVEL TO 50,000 FT
SHOCK	PER MIL-PRF-8805 (SYMBOL M - 100g)
VIBRATION	PER MIL-PRF-8805 (SYMBOL 2,10-2000 Hz & 15g PEAK)
MOISTURE RESISTANCE	PER MIL-PRF-8805, (10 DAY TEST)
THERMAL SHOCK	PER MIL-PRF-8805, (5 CYCLE TEST)
SALT SPRAY	PER MIL-PRF-8805, (96 HOUR TEST)

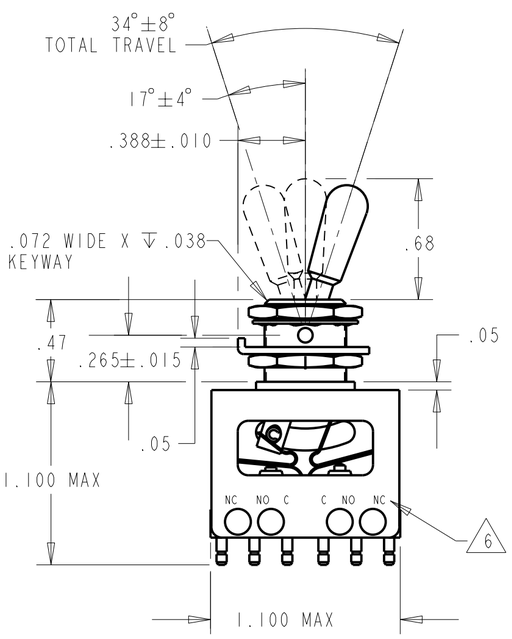

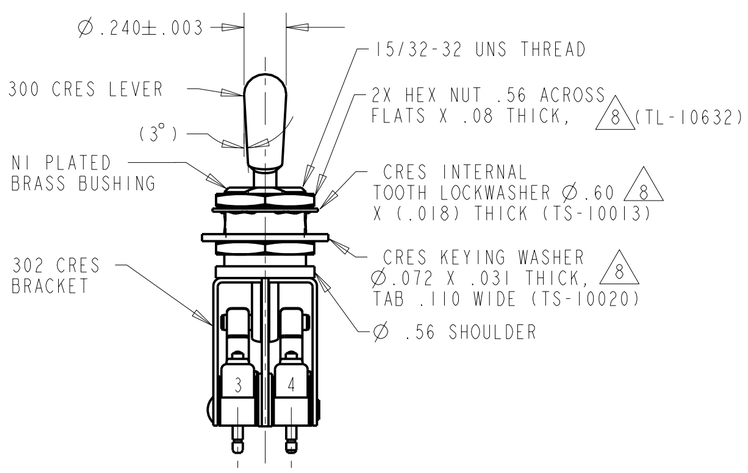

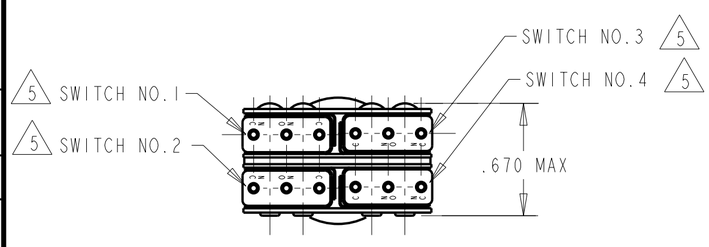

NOTES
1 - UNIT INCLUDED 4X "12SX" TYPE BASIC SWITCH
2 - SWITCHES DO NOT NECESSARILY OPERATE SIMULTANEOUSLY
3 - PLATED TERMINALS WILL ACCEPT "AMP INC." Ø.058 PIN RECEPTACLES
4 DULL FINISH ON LEVER AND BUSHING
5 SWITCH NUMBERS MARKED ON END OF BASIC SWITCHES
6 TERMINALS DESIGNATION MARKED ON BOTH SIDES OF UNIT
7 NOT APPLICABLE, TWO POSITION SWITCH
8 HARDWARE FURNISHED ASSEMBLED WITH SWITCH OR IN PACKET 15PA313-AT PER MIL-PRF-8805
9 - REPLACEMENT MOUNTING HARDWARE PACKET 15PA313-AT

64AT43 SERIES CHART 1 | REPLACES - | PAGE 1 OF | RELEASE NO. PR-23108 | DRAWING NUMBER | ISSUE 5

REVISIONS
A 203862 JLH SEP01
B 204179 LJK 17 OCT 01
C 204763 GLH 24JAN02

CHECK | CHECK | 11SEP01 | SAV | CHECK | 11SEP01 | DRAWN JLH | PTC/CAD 2D

ANSI Y14.5M-1982 APPLIES

THIS DRAWING COVERS A PROPRIETARY ITEM AND IS THE PROPERTY OF MICRO SWITCH. A DIVISION OF HONEYWELL. THIS DRAWING IS NOT TO BE COPIED OR USED WITHOUT THE APPROVAL OF MICRO SWITCH.

MICRO SWITCH a Honeywell Division
FED. MFG. CODE 91929

ASSEMBLY-
TOGGLE SWITCH

CATALOG LISTING
64AT43 SERIES
CHART 1

THIRD ANGLE PROJECTION

SCALE 1.5 : 1

DO NOT SCALE PRINT

UNLESS OTHERWISE SPECIFIED TOLERANCES ARE

ONE PLACE	(.0)	±.030
TWO PLACES	(.00)	±.015
THREE PLACES	(.000)	±.005
ANGLES		±

WEIGHT