THIS DRAWING IS UNPUBLISHED. RELEASED FOR PUBLICATION -,- .
© COPYRIGHT - BY TYCO ELECTRONICS CORPORATION. ALL INTERNATIONAL RIGHTS RESERVED.

| LOC | DIST |
|---|---|
| AF | 50 |

REVISIONS

| P | LTR | DESCRIPTION | DATE | DWN | APVD |
|---|---|---|---|---|---|
| | B1 | REVISED PER ECR-09-000368 | 19JAN09 | HMR | DD |

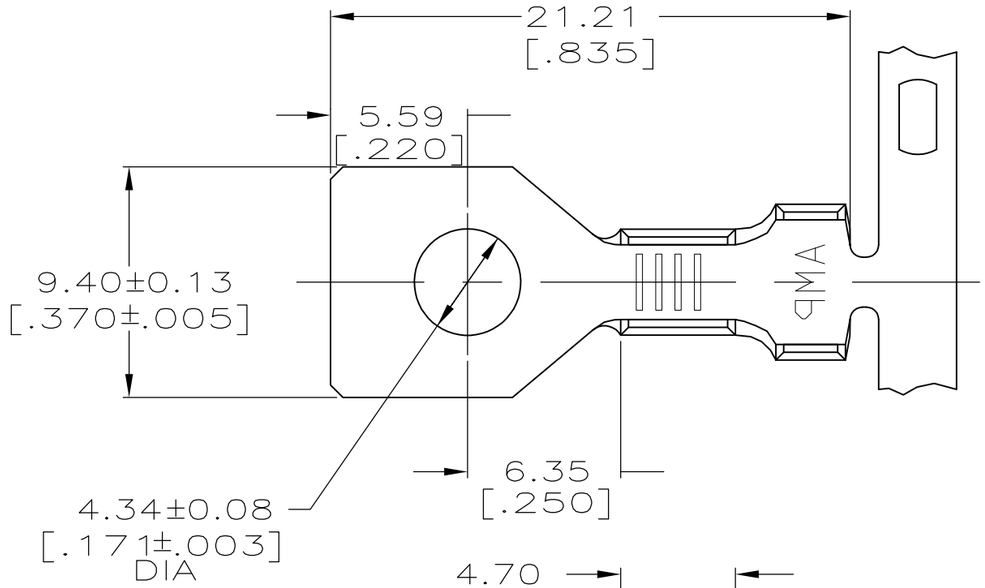


1 CONTINUOUS STRIP ON REEL

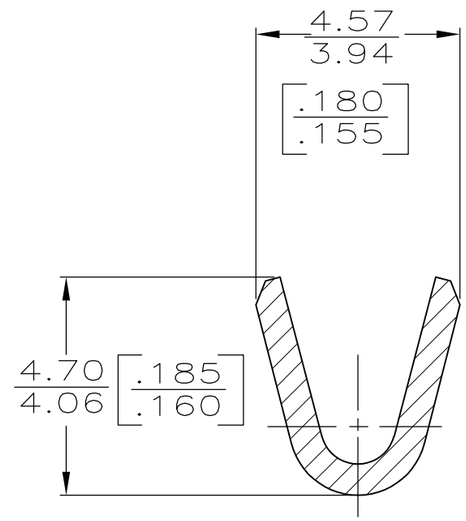


SECTION A–A
SCALE 8:1

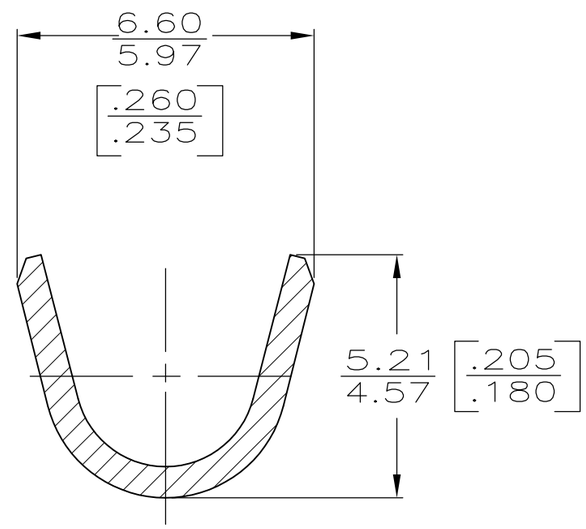


SECTION B–B
SCALE 8:1

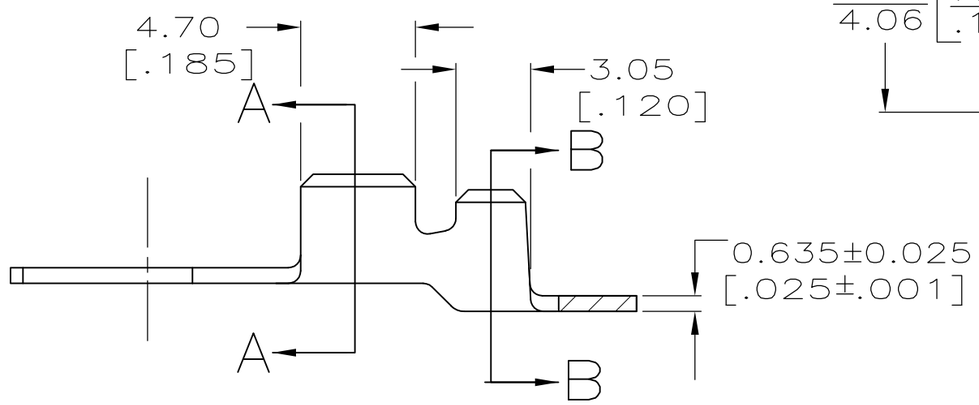


| | | | | |
|---|---|---|---|---|
| OBSOLETE | #2 HARD BRASS | 2.16–3.56 DIA [.085–.140] | 0.8mm² – 2.0mm² [18–14] AWG | ~~62975–2~~ |
| | 1/4 HARD PHOS BRONZE | | | 62975–1 |
| | MATERIAL | INSULATION RANGE | WIRE RANGE | PART NO |

| | | | | | | |
|---|---|---|---|---|---|---|
| F or O | 5.59 [.220] | 6.35 [.250] | F | 3.56 [.140] | 2.16[.085] | 2.0mm² [14] |
| | | | | | 1.98[.078] | 1.3mm²[16] |
| | | | | | 1.85[.073] | 0.8mm²[18 |
| TYPE | WIDTH | STRIP LENGTH ±0.38 [±.015] | TYPE | WIDTH | ±0.051[±.002] HEIGHT | WIRE |
| INSUL BARREL CRIMP | | | WIRE BARREL CRIMP | | | |

THIS DRAWING IS A CONTROLLED DOCUMENT.

DIMENSIONS: mm [INCHES]

TOLERANCES UNLESS OTHERWISE SPECIFIED
0 PLC ± –
1 PLC ± –
2 PLC ± –
3 PLC ± 0.25 [.010]
4 PLC ± –
ANGLES ± –

MATERIAL: SEE TABLE

FINISH: 0.02032 [.000080] MIN TIN PL PER MIL-T-10727

| | | |
|---|---|---|
| DWN | P FORTNEY | 9/20/90 |
| CHK | JR RUTH | 9/20/90 |
| APVD | — | |
| PRODUCT SPEC | — | |
| APPLICATION SPEC | — | |
| WEIGHT | — | |

CUSTOMER DRAWING

Tyco Electronics
Tyco Electronics Corporation
Harrisburg, PA 17105–3608

NAME: RING

| SIZE | CAGE CODE | DRAWING NO | RESTRICTED TO |
|---|---|---|---|
| A3 | 00779 | C-62975 | — |

| SCALE | SHEET | REV |
|---|---|---|
| 4:1 | 1 OF 1 | B1 |