THIS DRAWING IS UNPUBLISHED. RELEASED FOR PUBLICATION ,19 .
© COPYRIGHT 19 BY AMP INCORPORATED. ALL RIGHTS RESERVED.

LOC	DIST
AA	27

REVISIONS

P	LTR	DESCRIPTION	DATE	DWN	APVD
	B	REDWN & REV; 0G1Z-0042-99	12MAY00	LH	LS

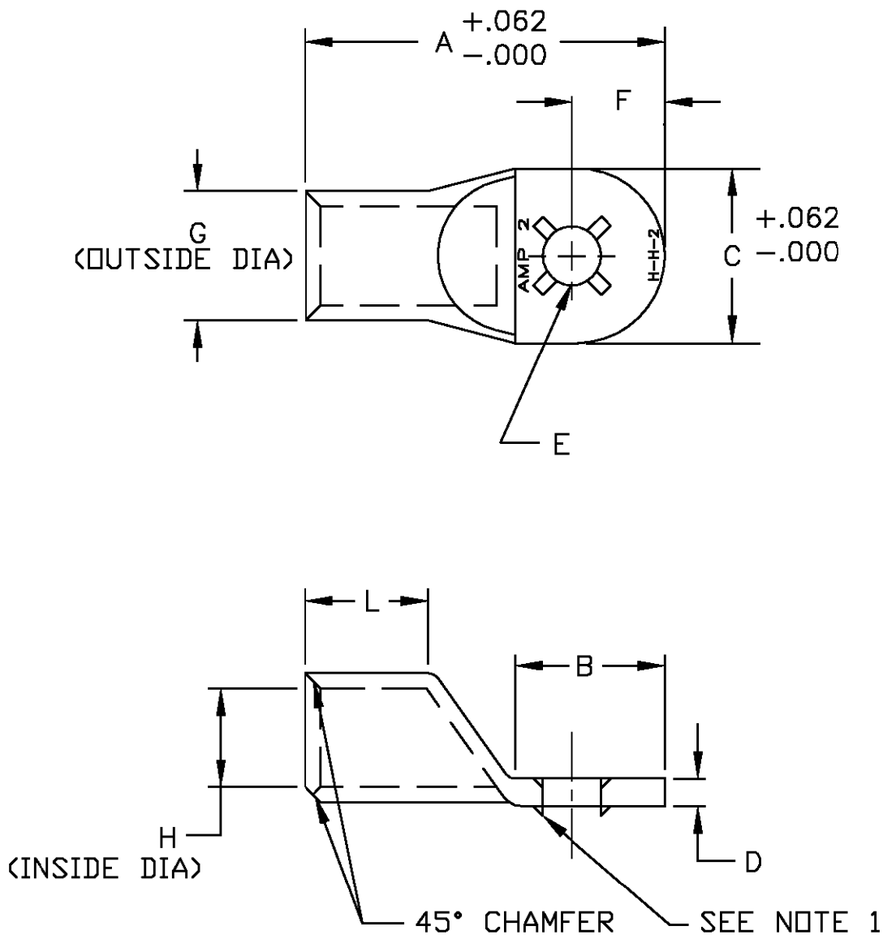

1. LOCKING LANCE FOR -3 ONLY.

BOLT HOLE SIZE	L	H	G	F	E	D	C	B	A	PART NUMBER
	DIMENSIONS, INCHES									
.375	.75	.375	.516	.438	ø.391	.135	.750	1.00	2.14	606290-5
.500	.75	.375	.516	.500	ø.516	.135	.859	1.150	2.25	606290-4
.375	.75	.375	.516	.438	ø.391	.135	.719	1.00	2.14	606290-3
.312	.75	.375	.516	.438	ø.328	.135	.719	.94	2.14	606290-2
.250	.75	.375	.516	.438	ø.266	.135	.719	.94	2.14	606290-1

THIS DRAWING IS A CONTROLLED DOCUMENT.

DIMENSIONS: INCHES

TOLERANCES UNLESS OTHERWISE SPECIFIED:
0 PLC ±
1 PLC ±
2 PLC ± .02
3 PLC ± .005
4 PLC ± .0005
ANGLES ± 3°

MATERIAL HIGH CONDUCTIVITY WROUGHT COPPER

FINISH ELECTRO TIN PLATE

DWN L.HALL 18APR00
CHK L.H. SMITH 12MAY00
APVD B. ANTHONY 12MAY00
PRODUCT SPEC
APPLICATION SPEC
WEIGHT

AMP Incorporated
Harrsiburg PA 17105-3608

NAME AMP TUBULAR TERMINAL 2 AWG

SIZE	CAGE CODE	DRAWING NO	RESTRICTED TO
A3	00779	C-606290	

CUSTOMER DRAWING | SCALE NTS | SHEET 1 OF 1 | REV B

OBSOLETE
NOT the LATEST REVISION