DRAWING MADE IN THIRD ANGLE PROJECTION

THIS DRAWING IS UNPUBLISHED. RELEASED FOR PUBLICATION .19 .

© COPYRIGHT 19 BY AMP INCORPORATED. ALL INTERNATIONAL RIGHTS RESERVED.

LOC	DIST
AD	25

P	F	ZONE	LTR	DESCRIPTION	DATE	APPD
			H	EC 0504-0028-96	10/3/96	CR
			J	EC 0504-0087-96	11/18/96	CR
			K	REV PER EC 0512-0016-03	16DEC03.	AS

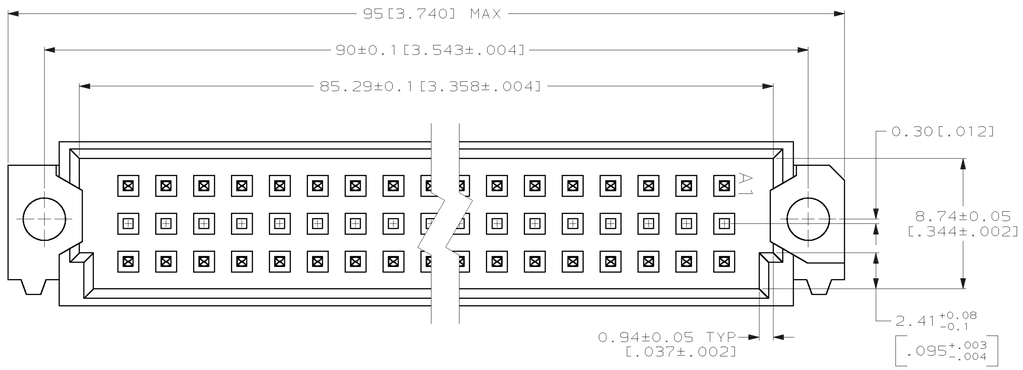

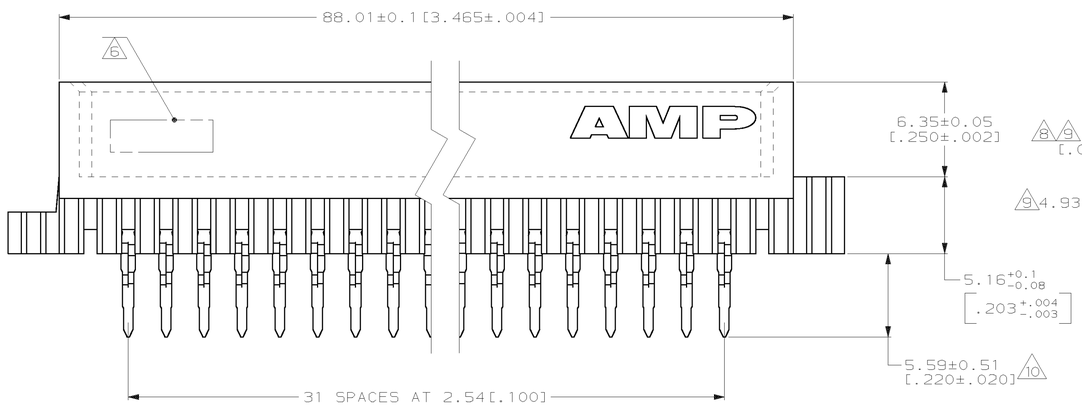

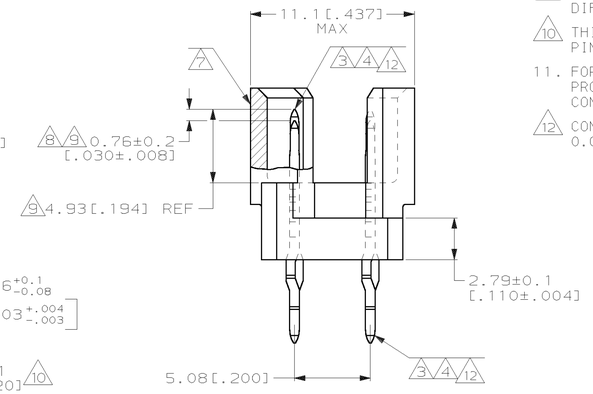

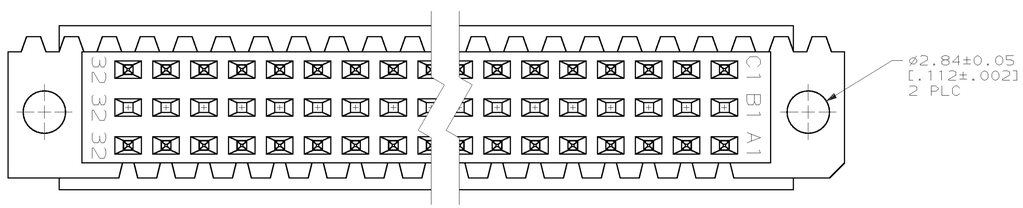

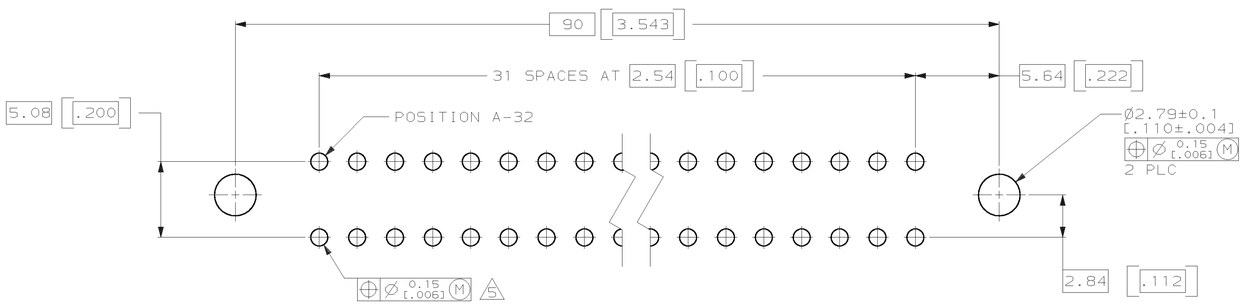

PC BOARD LAYOUT

1. HOUSING MATERIAL: GLASS-FILLED POLYESTER. COLOR: GRAY.
2. POST MATERIAL: PHOSPHOR BRONZE.
3. POST FINISH: DIN 41612 CLASS 3 IN CONTACT AREA. TIN-LEAD PLATE ON POSTS.
4. POST FINISH: DIN 41612 CLASS 2 IN CONTACT AREA. TIN-LEAD PLATE ON POSTS.
5. PC BOARD HOLES REQUIRED FOR ACTION PIN CONTACTS ARE 1.151[.0453] DRILL DIAMETER PLATED THROUGH WITH 0.02-.0.08[.001-.003] COPPER AND 0.008[.0003] MINIMUM TIN-LEAD PLATING. FINISHED HOLE AFTER PLATING, 0.94-1.09[.037-.043] DIAMETER.
6. PART NUMBER, DATE CODE MARKED THIS APPROXIMATE AREA.
7. MARKING ON THIS SIDE.
8. FOR "MFBL" APPLICATIONS, A 2.36[.093] MINIMUM THICK PC BOARD IS REQUIRED. PROGRAMMABLE SEATING TOOL 768216-2 MUST BE USED.
9. TO BE 4.16[.164] REF FOR LAST MAKE PINS AFTER SEATING. POST LENGTH DIFFERENCE BETWEEN SHORT AND LONG PINS TO BE 0.76±0.2[.030±.008] AFTER SEATING.
10. THIS DIMENSION WILL BE 6.35±0.51[.250±.020] AFTER SEATING FOR PINS WITH 4.17[.164] REF MATING POST.
11. FOR 1.57[.062] THICK PC BOARD APPLICATIONS, USE SEATING TOOL 768211-2. PROGRAMMABLE SEATING TOOL 768216-2 WITH PUSH PINS FOR MAKE FIRST CONTACTS ONLY, CAN ALSO BE USED.
12. CONTACT FINISH: 0.00076[.000030] GOLD IN CONTACT AREA. 0.00127[.000050] NICKEL UNDERPLATE ALL OVER. TIN-LEAD PLATE ON POSTS.

SUPERSEDED BY 536098-5	3	1-32	X	-	X	64	536098-9
	4	1-32	X	-	X	64	536098-5
OBSOLETE	12	1-32	X	-	X	64	536098-4
NOTES		POSITIONS LOADED	C	B	A	NO. OF LOADED POSITION	ASSY PART NUMBER
			ROWS LOADED				

PART NO

DO NOT SCALE PRINT.
UNLESS SPECIFIED
DIMENSIONS IN mm [INCHES]
TOLERANCES ON :
1 PLC DEC ± -
2 PLC DEC ± 0.13[.005]
ANGLES ± -

MATERIAL
HOUSING: 1
POST: 2

FINISH
POST: 3 4 12

DR L. BRINER 1/14/92
CHK D.C. RUBENDALL 1/15/92
APPD D.C. RUBENDALL 1/15/92
APPD K.R. PARMER 1/15/92

PRODUCT SPEC -

APPLICATION SPEC -

WEIGHT -

AMP Incorporated
Harrisburg, PA 17105-3608

NAME
PIN ASSEMBLY, EUROCARD, TYPE R,
MFBL OR FOR 1.57[.062] PC BOARD

SIZE	CAGE CODE	DRAWING NO
D	00779	536098
SCALE 5:1		SHEET 1 OF 1

CUSTOMER DRAWING

AMP 1756-3 REV 11-89

16-DEC-03 11:06:38 us043446 /home/us043446/dmmod