MATERIAL NUMBER	OLD PART NUMBER	FINISHED LENGTH
130013-0201	1R3006A20A060	6.00" +.75" -0 [.2M +19.1 -0]
130013-0202	1R3006A20A120	12.00" +1.75" -0 [.3M +44.5 -0]
130013-0211	1R3006A20F030	3.00' +2.19" -0 [.9M +55.6 -0]
130013-0215	1R3006A20F060	6.00' +3.50" -0 [1.8M +88.9 -0]

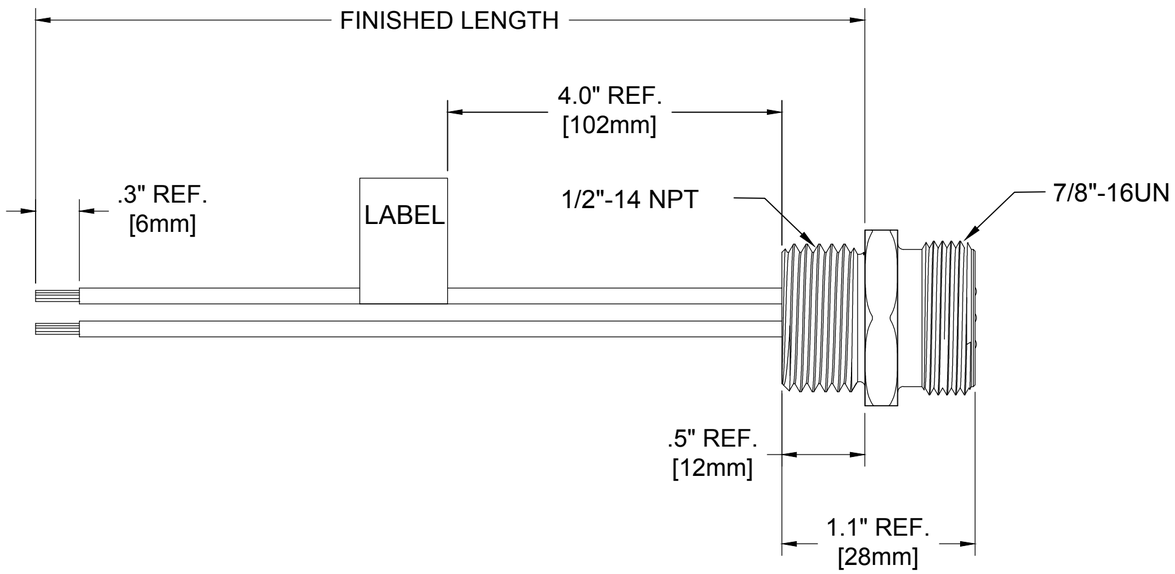

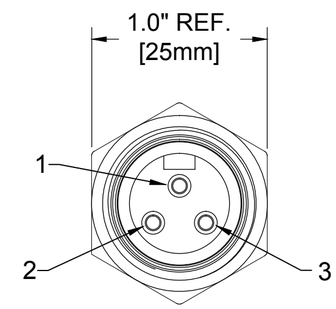

MALE FACE VIEW

1	GREEN-YELLOW
2	BLACK
3	WHITE

WIRING DIAGRAM

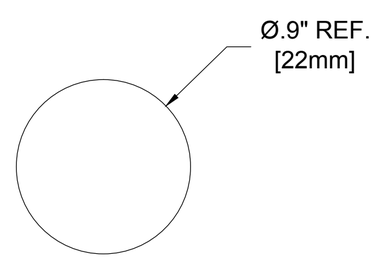

KNOCKOUT HOLE

1R3006A20A060

cable type
16 AWG
PVC

cable length
060----6 Inches
120----12 Inches

SPECIFICATION DATA

COMPONENT	MATERIAL	FINISH
LABEL	MYLAR	BLACK/YELLOW
INSERT	PVC	YELLOW
CONTACT	COPPER ALLOY	Au OVER Ni
RECEPTACLE SHELL	ZINC DIE CAST	BLACK E-COATED
CABLE #16	PVC	SEE WIRING DIAGRAM
VOLTAGE RATING:		600VAC/VDC
AMPERAGE RATING:		13A
PROTECTION CLASS:		IP 67
OPERATING TEMPERATURE:		-20°C / 105°C

REV	DESCRIPTION
B	UPDATED FOR PART MATRIX EC NO: IPG2014-0988 DRWN: GGUSTAFS 2013/12/03 CH'KD: TWOLDEGE ---- APPR: BWOODMAN ----

QUALITY SYMBOL
▼=0
(C)=0

GENERAL TOLERANCES (UNLESS SPECIFIED)

	mm	INCH
4 PLACES	±---	±---
3 PLACES	±---	±.005
2 PLACES	±.13	±.010
1 PLACE	±.25	±.020
ANGULAR ±.5°		

DRAFT WHERE APPLICABLE MUST REMAIN WITHIN DIMENSIONS

DIMENSION STYLE: IN/MM
SCALE: NTS
DESIGN UNITS: INCH
THIRD ANGLE PROJECTION

DRAWN BY: GGUSTAFS DATE: 2013/12/03
CHECKED BY: LH DATE: 2009/04/01
APPROVED BY: ---- DATE: ----

TITLE: MINI-CHANGE RECEPTACLE 3 POLE MALE 1/2 NPT 16/1 AWG PVC

molex MOLEX INCORPORATED

MATERIAL NO.: SEE CHART
DOCUMENT NO.: SD-130013-003
SHEET NO.: 1 0F 1
SIZE: C

THIS DRAWING CONTAINS INFORMATION THAT IS PROPRIETARY TO MOLEX INCORPORATED AND SHOULD NOT BE USED WITHOUT WRITTEN PERMISSION