THIS DRAWING IS UNPUBLISHED. RELEASED FOR PUBLICATION -,- .
© COPYRIGHT - By - ALL RIGHTS RESERVED.

REVISIONS

P	LTR	DESCRIPTION	DATE	DWN	APVD
	H2	REVISED PER ECO-12-002699	13FEB12	KH	DR
	H3	REVISED PER ECO-17-004099	28AUG2017	RS	DR

AMP WIRE RANGE	E13288 Listed
4/0 AWG SOLID OR STRANDED	4/0 AWG SOLID OR STRANDED

LR7189 Certified	MILITARY P/N AND CLASS
4/0 AWG SOLID OR STRANDED	MS 20659-123 CLASS 2

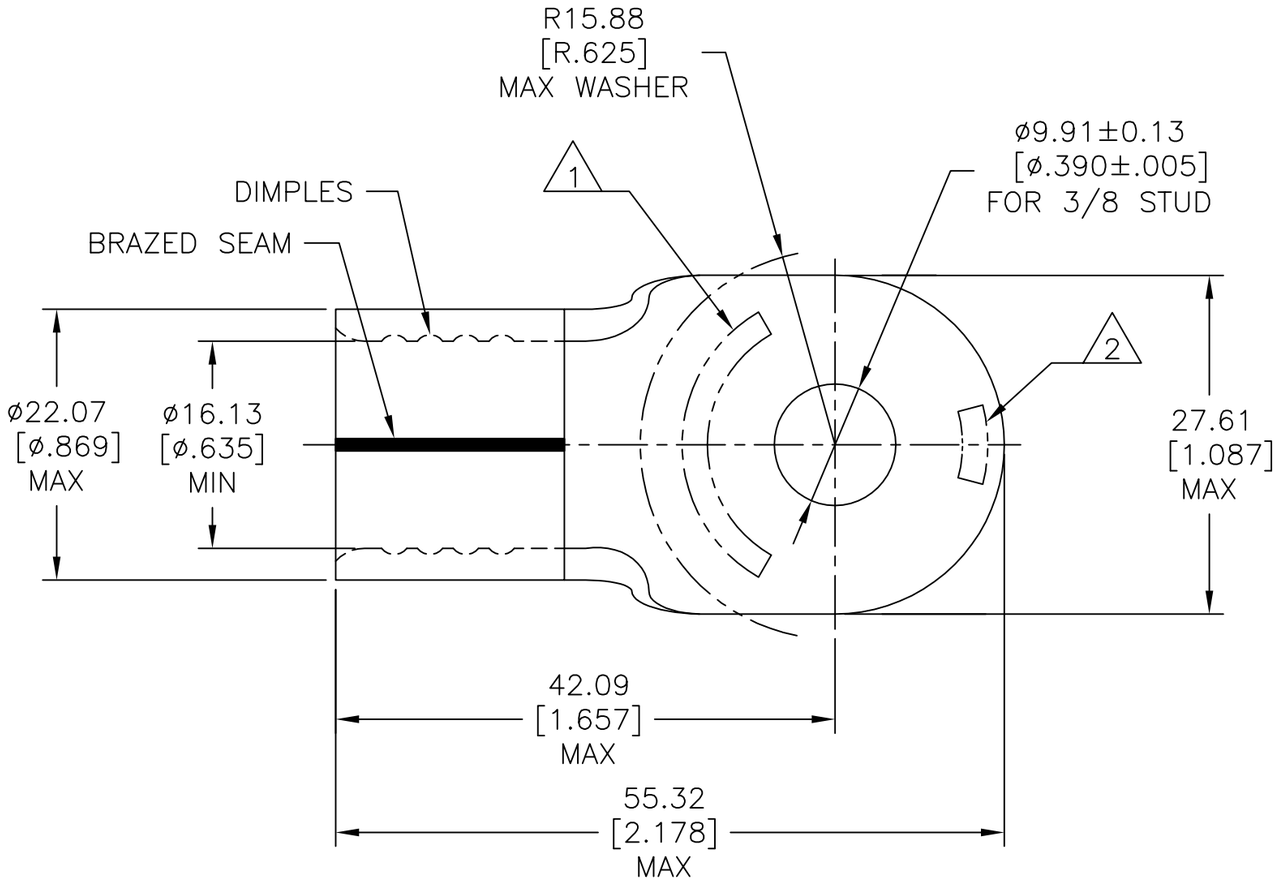

1. STAMP AMP 4/0W* APPROX AS SHOWN.
2. STAMP AMP 200 APPROX AS SHOWN.
3. MATERIAL THK: 2.59±0.08 [.102±.003].
4. TIN PLATE 0.00254[.000100] MIN EXT. THK PER ASTM B545.
5. NICKEL PLATE 0.00762[.000300] MIN EXT THK PER SAE AMS QQ-N-290.
6. PART IS NOT UL LISTED OR CSA CERTIFIED OR MILITARY QUALIFIED.

RECOMMENDED OPERATING TEMP.	QTY.	PACKAGE TYPE	PART NUMBER
343°C [650°F] (6, 5)	50	LOOSE PIECE	321878-1
170°C [338°F] (4)			321878

AMP INCORPORATED
CUSTOMER SERVICE SYSTEMS

FOR ADDITIONAL PRODUCT INFORMATION OR COPIES OF DRAWINGS AND TECHNICAL DOCUMENTS	PRODUCT INFORMATION CENTER 1-800-522-6752
FOR APPLICATION TOOLING INFORMATION	TOOLING ASSISTANCE CENTER 1-800-722-1111
FOR ORDER ENTRY	1-800-526-5142

MAX RECOMMENDED OPERATING TEMPERATURE: SEE TABLE

VOLTAGE RATING: NOT APPLICABLE

WIRE CROSS SECTIONAL AREA RANGE: 96.3-117.0mm² [190,000-231,100] CIR MILS SOLID OR STRANDED

THIS DRAWING IS A CONTROLLED DOCUMENT.

DIMENSIONS: mm [INCHES]

TOLERANCES UNLESS OTHERWISE SPECIFIED:

0 PLC	± -
1 PLC	± -
2 PLC	± 0.20[.008]
3 PLC	± -
4 PLC	± -
ANGLES	± -

MATERIAL: COPPER PER ASTM B-152 ANNEALED

FINISH: 4

DWN	DK SCHRUM	5/25/93
CHK	RD HEIM	1/27/94
APVD	RE ROSER	1/27/94
PRODUCT SPEC	—	
APPLICATION SPEC	—	
WEIGHT	—	

TE Connectivity

NAME: TERMINAL, RING TONGUE, SOLISTRAND, STRATO-THERM, 4/0 AWG

SIZE	CAGE CODE	DRAWING NO	RESTRICTED TO
A3	00779	C-321878	—

CUSTOMER DRAWING | SCALE 2:1 | SHEET 1 OF 1 | REV H3

1470-19 (1/15)