EB13C5G1H-38.400M TR

Click part number to visit Part Number Details page

Ecliptek

REGULATORY COMPLIANCE (Data Sheet downloaded on Dec 2, 2017)

Lead Free COMPLIANT | EU RoHS 2011/65 + 2015/863 COMPLIANT | China RoHS COMPLIANT | REACH 174 SVHC COMPLIANT

Click badges to download compliance docs

Regulatory Compliance standards are subject to updates by governing bodies. Click the badges to download the latest compliance docs for this part number directly from Ecliptek.

DRC CONFLICT FREE

ITEM DESCRIPTION

Quartz Crystal Clock Oscillators XO (SPXO) LVCMOS (CMOS) 3.3Vdc 4 Pad 3.2mm x 5.0mm Ceramic Surface Mount (SMD) 38.400MHz ±100ppm over -40°C to +85°C

ELECTRICAL SPECIFICATIONS

Nominal Frequency	38.400MHz
Frequency Tolerance/Stability	±100ppm over -40°C to +85°C (Inclusive of all conditions: Calibration Tolerance at 25°C, Frequency Stability over the Operating Temperature Range, Supply Voltage Change, Ouput Load Change, First Year Aging at 25°C, Shock, and Vibration)
Supply Voltage	3.3Vdc ±10%
Input Current	6mA Maximum
Output Voltage Logic High (Voh)	90% of Vdd Minimum (IOH = -4mA)
Output Voltage Logic Low (Vol)	10% of Vdd Maximum (IOL = +4mA)
Rise/Fall Time	4nSec Maximum (Measured at 20% to 80% of waveform)
Duty Cycle	50 ±10(%) (Measured at 50% of waveform)
Load Drive Capability	15pF Maximum
Output Logic Type	CMOS
Logic Control / Additional Output	Tri-State
Tri-State Input Voltage (Vih and Vil)	90% of Vdd Minimum or No Connect to Enable Output, 10% of Vdd Maximum to Disable Output (High Impedance)
Standby Current	10µA Maximum (Disabled Output: High Impedance)
RMS Phase Jitter	1pSec Maximum (Fj = 12kHz to 20MHz)
Period Jitter (Deterministic)	0.2pSec Typical, 3pSec Maximum
Period Jitter (Random)	2pSec Typical, 5pSec Maximum
Period Jitter (RMS)	3pSec Typical, 7pSec Maximum
Period Jitter (pk-pk)	40pSec Typical, 100pSec Maximum
Start Up Time	10mSec Maximum
Storage Temperature Range	-55°C to +125°C

ENVIRONMENTAL & MECHANICAL SPECIFICATIONS

ESD Susceptibility	MIL-STD-883, Method 3015, Class 1, HBM: 1500V
Fine Leak Test	MIL-STD-883, Method 1014, Condition A
Flammability	UL94-V0
Gross Leak Test	MIL-STD-883, Method 1014, Condition C
Mechanical Shock	MIL-STD-883, Method 2002, Condition B
Moisture Resistance	MIL-STD-883, Method 1004
Moisture Sensitivity	J-STD-020, MSL 1
Resistance to Soldering Heat	MIL-STD-202, Method 210, Condition K
Resistance to Solvents	MIL-STD-202, Method 215
Solderability	MIL-STD-883, Method 2003
Temperature Cycling	MIL-STD-883, Method 1010, Condition B
Vibration	MIL-STD-883, Method 2007, Condition A

Ecliptek, LLC 5458 Louie Lane, Reno, NV 89511 1-800-ECLIPTEK or 714.433.1200

EB13C5G1H-38.400M TR

Click part number to visit Part Number Details page

MECHANICAL DIMENSIONS (all dimensions in millimeters)

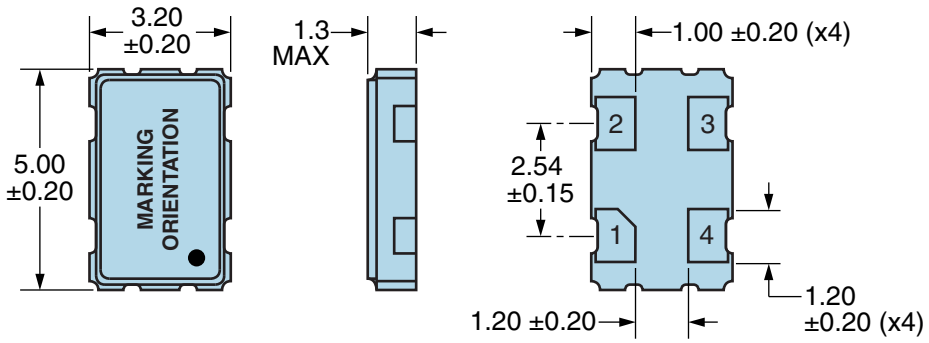

PIN	CONNECTION
1	Tri-State
2	Case/Ground
3	Output
4	Supply Voltage

LINE	MARKING
1	**E38.400** *E=Ecliptek Designator*
2	**XXXXX** *XXXXX=Ecliptek Manufacturing Identifier*

Suggested Solder Pad Layout

All Dimensions in Millimeters

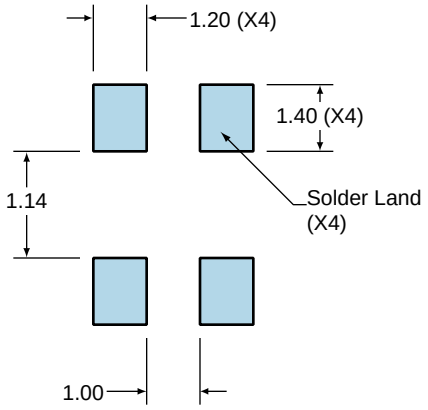

All Tolerances are ±0.1

Ecliptek, LLC 5458 Louie Lane, Reno, NV 89511 1-800-ECLIPTEK or 714.433.1200

EB13C5G1H-38.400M TR

Click part number to visit Part Number Details page

OUTPUT WAVEFORM & TIMING DIAGRAM

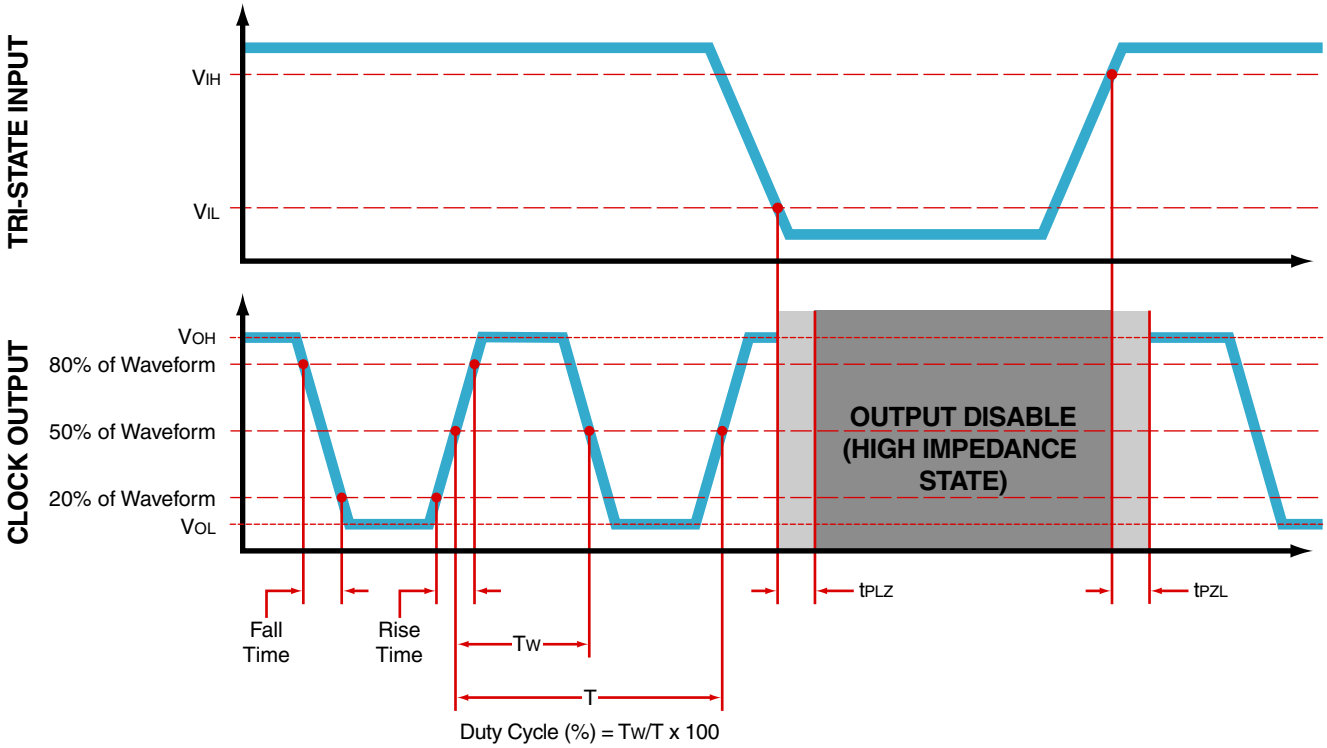

Ecliptek, LLC 5458 Louie Lane, Reno, NV 89511 1-800-ECLIPTEK or 714.433.1200

EB13C5G1H-38.400M TR

Click part number to visit Part Number Details page

Test Circuit for CMOS Output

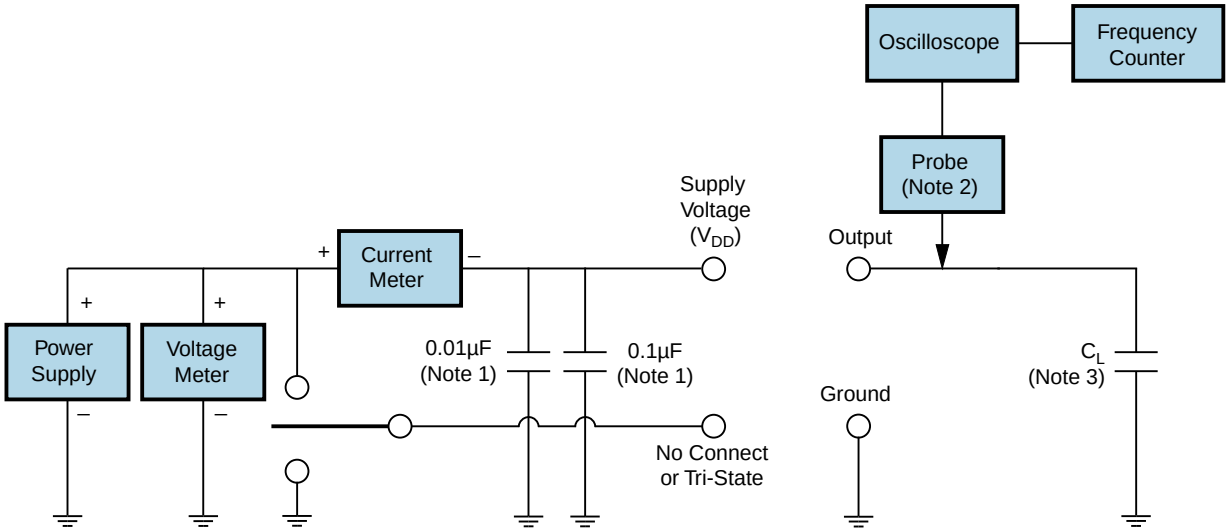

Note 1: An external 0.1µF low frequency tantalum bypass capacitor in parallel with a 0.01µF high frequency ceramic bypass capacitor close to the package ground and V_{DD} pin is required.
Note 2: A low capacitance (<12pF), 10X attenuation factor, high impedance (>10Mohms), and high bandwidth (>300MHz) passive probe is recommended.
Note 3: Capacitance value C_L includes sum of all probe and fixture capacitance.

Ecliptek, LLC 5458 Louie Lane, Reno, NV 89511 1-800-ECLIPTEK or 714.433.1200

EB13C5G1H-38.400M TR

Tape & Reel Dimensions

Quantity Per Reel: 1,000 units

All Dimensions in Millimeters

Compliant to EIA-481

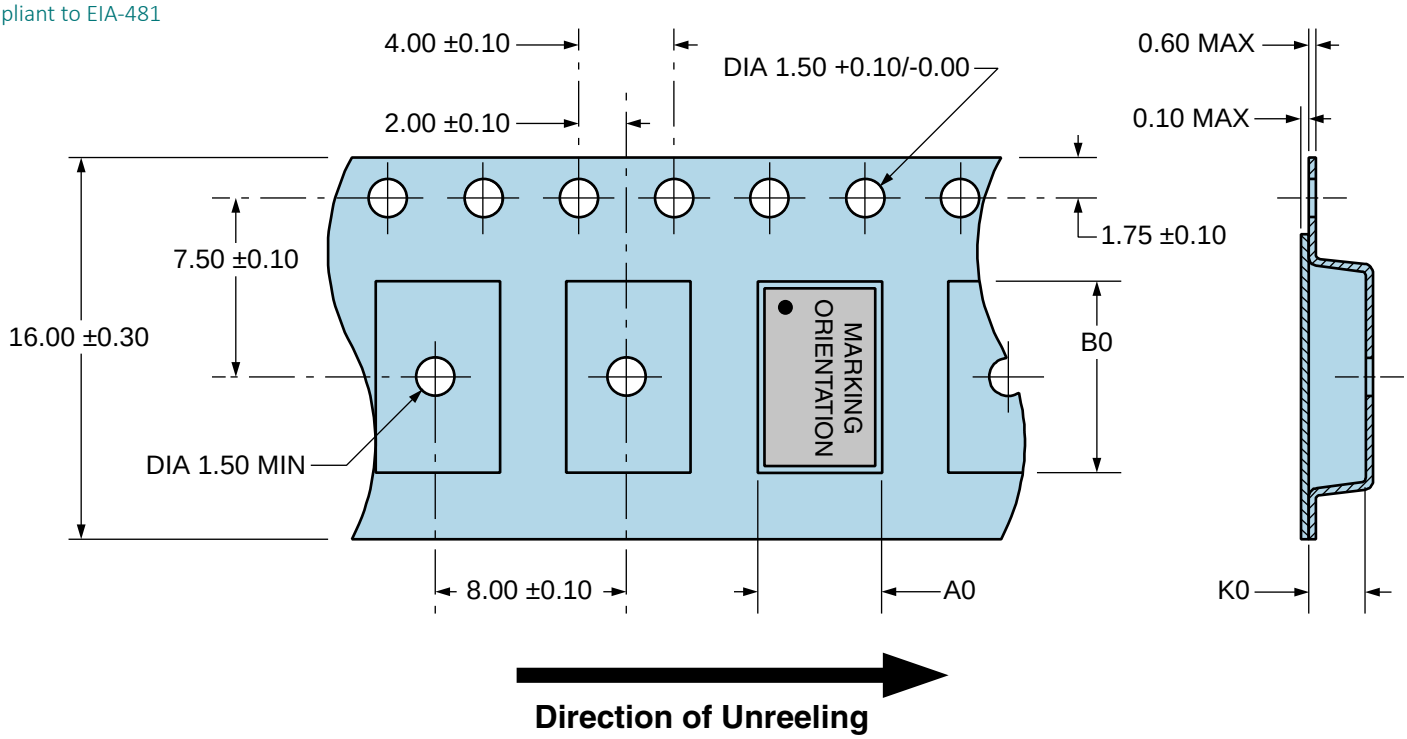

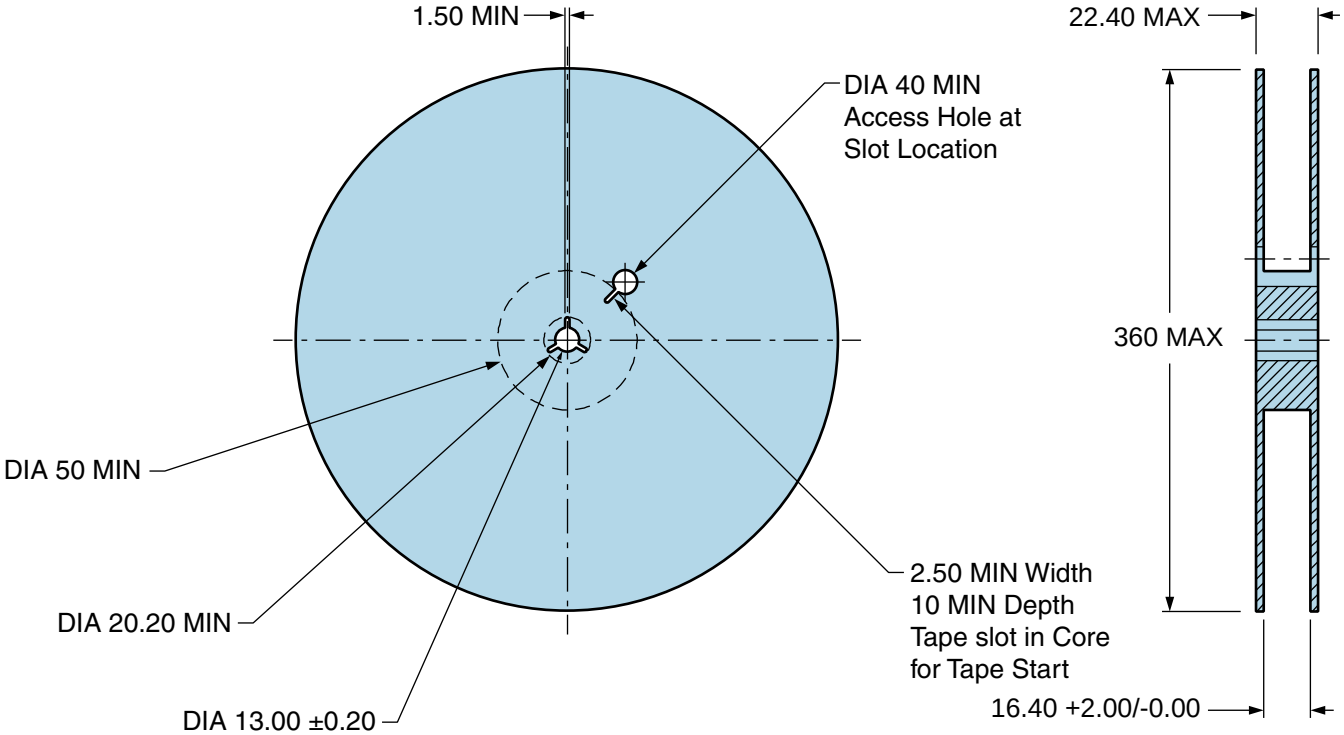

Ecliptek, LLC 5458 Louie Lane, Reno, NV 89511 1-800-ECLIPTEK or 714.433.1200