REVISIONS			
REV	DESCRIPTION	DATE	APPROVED
01_0	RELEASED	4/21/99	

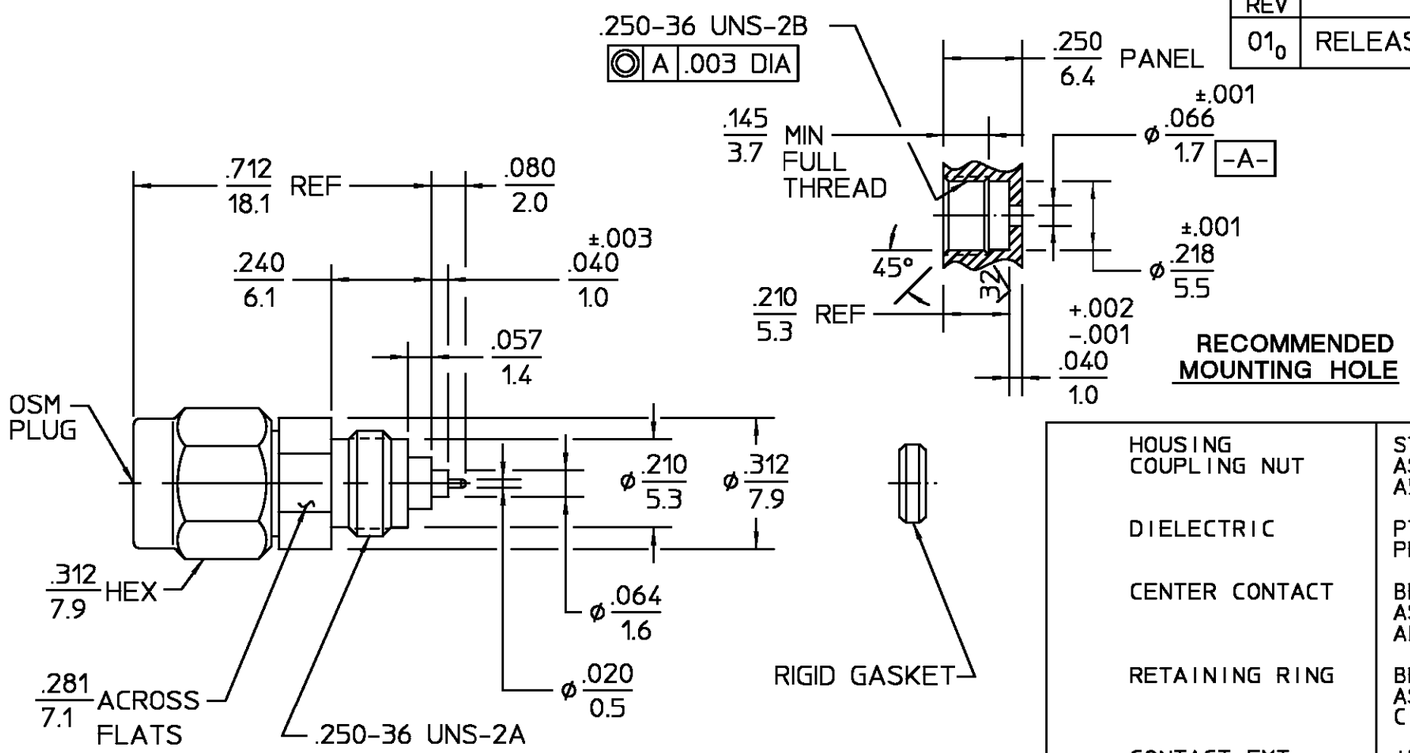

COMPONENT	MATERIAL	FINISH
HOUSING COUPLING NUT	STAINLESS STEEL PER ASTM-A484 AND ASTM-A582, TYPE 303	GOLD PLATED PER MIL-G-45204
DIELECTRIC	PTFE FLUOROCARBON PER ASTM-D-1457	N/A
CENTER CONTACT	BERYLLIUM COPPER PER ASTM-B-196 OR ASTM-B-197, ALLOY C17300, CONDITION H	GOLD PLATE PER MIL-G-45204
RETAINING RING	BERYLLIUM COPPER PER ASTM-B-194, ALLOY C17200, CONDITION H	N/A
CONTACT EXT BUSHING	IRON-NICKEL-COBALT ALLOY PER MIL-1-23011 CLASS 1 (KOVAR)	GOLD PLATE PER MIL-G-45204
GASKET	SILICONE RUBBER PER ZZ-R-765	N/A
RIGID GASKET	SAE C12L14 STEEL	SILVER PLATED PER QQ-S-365
HERMETIC SEAL	GLASS BEAD	N/A

ELECTRICAL		MECHANICAL		ENVIRONMENTAL
Nominal Impedance (Ohms)	50	Interface Dimensions MIL-STD-348A		Temperature Rating -65°C To +125°C
Frequency Range (GHz)	DC - 18	Fig. 310.1		Vibration - MIL-STD-202, Method 204, Condition D, 20G's
VSWR	1.04 +.009f(GHz)	Recommended Mating Torque	7 - 10 in-lbs	Shock - MIL-STD-202, Method 213, Condition I, 100G's
Insertion Loss (dB MAX)	$.04\sqrt{f(GHz)}$	Mating Characteristics:		Thermal Shock MIL-STD-202, Method 107, Condition B
RF Leakage (dB MIN)	-(100 - f(GHz))	Insertion (MAX Lbs)	N/A	Moisture Resistance - MIL-STD-202, Method 106
Corona, 70,000 Ft (VRMS MIN)	333	Withdrawal (MIN Oz)	N/A	Corrosion - MIL-STD-202, Method 101, Condition B, 5% salt spray
Dielectric Withstanding Voltage (VRMS MIN)	1000 @ sea level	Force To Engage (In-Lbs MAX)	2.0	
Contact Resistance (Milliohms MAX)		Force To Disengage (In-Lbs MAX)	2.0	
Center Contact	10.0	Center Contact Captivation		
Outer Contact	2.0	Axial (Lbs)	6.0	
RF High Potential @ sea level (VRMS MIN @ 5 MHz)	667	Radial (In-Oz)	N/A	
I.R.(Megohms)	5000	Weight (Grams)	T.B.D.	

.XXX = in
XX.X = mm (REF)

UNLESS OTHERWISE SPECIFIED DIMENSIONS ARE IN INCHES
TOLERANCE ON
FRAC. ± 1/64 DEC. ±.005 ANGLES ± 1°

DRAWN BY PATLAN DATE 8-31-98
CHECKED BY
APP'D BY 4/21/99

AMP

AMP Incorporated
140 Fourth Avenue
Waltham, MA 02451-7599

These drawings and specifications are the property of AMP Interconnect Division and shall not be reproduced or copied or used in whole or in part as the basis for the manufacture or sale of item(s) without written permission.

USE ASS'Y PROCEDURE

408-04848
NO. A.P. (20-601)

TITLE OSM PLUG-THD MTD NON HERMETIC ENVIRONMENTALLY DURABLE

SIZE	CODE IDENT NO.		REV
B	26805	2057-5123-00	01_0

SCALE 3 : 1 SHEET 1 OF 1

CUSTOMER DRAWING

AMP PART # 1053130-1
SHEET 1 OF 1 REV A