THIS DRAWING IS UNPUBLISHED. RELEASED FOR PUBLICATION 20
© COPYRIGHT 20 BY TYCO ELECTRONICS CORPORATION. ALL RIGHTS RESERVED.

PART NUMBER	REV	TERMINATOR	FEED TYPE	DESCRIPTION
1528821-1	A	LEADMAKER	MECH POST FEED	CUTS CARRIER
1528821-2	A	BENCH	MECH PRE FEED	CUTS CARRIER
1528821-6	A	LEADMAKER	MECH POST FEED	CONTINUOUS CARRIER
7-1528821-1	A	LEADMAKER	MECH POST FEED	-1 AND SPARE PARTS
7-1528821-2	A	BENCH	MECH PRE FEED	-2 AND SPARE PARTS
7-1528821-6	A	LEADMAKER	MECH POST FEED	-6 AND SPARE PARTS
7-1528821-7	A	-	-	SPARE PARTS KIT

SET UP GAGE 458637-3

LOC	DIST
A	66

REVISIONS

P	LTR	DESCRIPTION	DATE	DWN	APVD
	A	SEE ECO-07-019375	17AUG2007	LJL	MC
	A1	SEE ECR-08-011852	09MAY2008	MB	MC

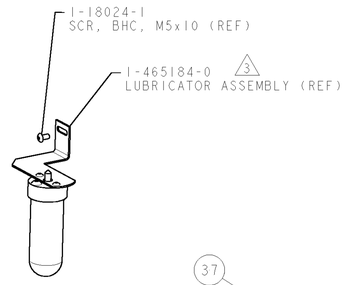

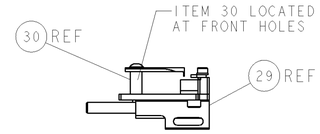

FEED TRACK POSITION
GUIDE BY INS. BARREL

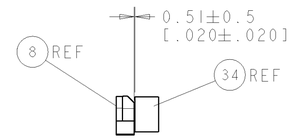

TERMINAL SUPPORT
LOCATION

CRIMP DATA	DEUTSCH TERMINAL	DEUTSCH CRIMP SPECS 5	
TERMINAL NAME: STAMPED CONTACT SOCKET/PIN SIZE 20			
CRIMP	SIZE	TYPE	RANGE
WIRE	1.88 [.074 IN]	F	0.50-1.00mm² or 22-16 AWG
INSUL	1.57 [.062 IN]	O	1.27-1.91 [.050-.075 IN] 6
WIRE STRIP LENGTH 3.81-5.09 [.150-.200 IN]		APPL INSTRUCTIONS 408-8322 & 408-8490	
TERMINAL APPL SPEC	DEUTSCH DRG C 0425-207-0000 7		FEED 12.70 [.500 IN]

TERMINALS APPLIED

TE TERM PN	MANUF TERM PN	TE TERM PN	MANUF TERM PN
286680-3	1062-20-0222	1572032-3	1060-20-0222
286680-4	1062-20-0244	1572032-4	1060-20-0244
-	-	-	-
-	-	-	-

WIRE SIZE	CRIMP HEIGHT * 7	REF SETTING *
1.00mm² or 16 AWG	1.27 [.050 IN]	C 1
18 AWG	1.24 [.049 IN]	C 3
0.75mm²	1.22 [.048 IN]	C 4
0.60mm²	1.07 [.042 IN]	D 6
20 AWG	0.99 [.039 IN]	E 1
0.50mm²	0.97 [.038 IN]	E 3
22 AWG	0.94 [.037 IN]	E 4
-	-	-
-	-	-
-	-	-
-	-	-
-	-	-

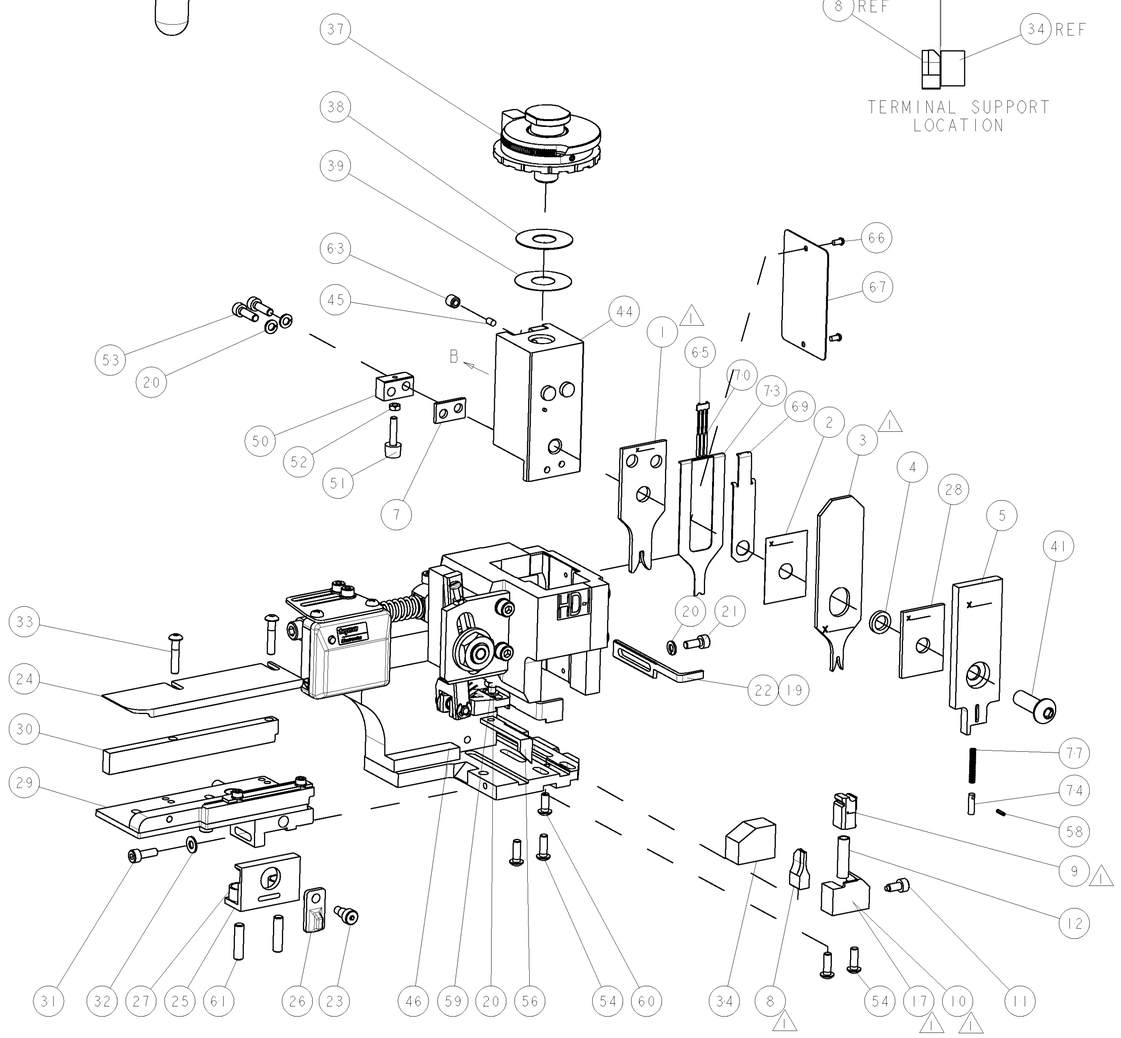

1. RECOMMENDED SPARE PARTS.
2. GREASE RAM, CAM, CAM FOLLOWER AND FEED ROD LIGHTLY.
3. CERTAIN TERMINALS REQUIRE LUBRICATION. REFER TO THE APPLICATOR INSTRUCTION SHEET FOR MORE INFORMATION.
4. LUBRICATE DAILY PER THE APPLICATOR INSTRUCTION SHEET SUPPLIED WITH THE APPLICATOR.
5. WIRE CRIMP DATA SUPPLIED BY TERMINAL MANUFACTURER. NOT RECOMMENDED BY TYCO ELECTRONICS UK LTD.
6. INS RANGE SHOWN IS THAT OF THE APPLICATOR NOT THAT OF THE TERMINAL. INS. RANGE IS DETERMINED BY CONNECTOR, REFER TO DEUTSCH DRG. C 0425-207-0000
7. REFER TO DEUTSCH DRG C 0425-207-0000 FOR CRIMP HEIGHT TOLERANCES, TENSILES, REAR/FRONT BELLMOUTHS, CUTOFF TAB, UP/DOWN & SIDE/SIDE BEND & MAX FLASH.

* WARNING
ON INSTALLATION, SET WIRE DISC TO LARGEST WIRE SIZE SETTING. USE OF SETTINGS BELOW MIN. REQUIRED CRIMP HEIGHT SETTING WILL CAUSE DAMAGE TO CRIMP TOOLING.

VIEW B ROTATED 180°

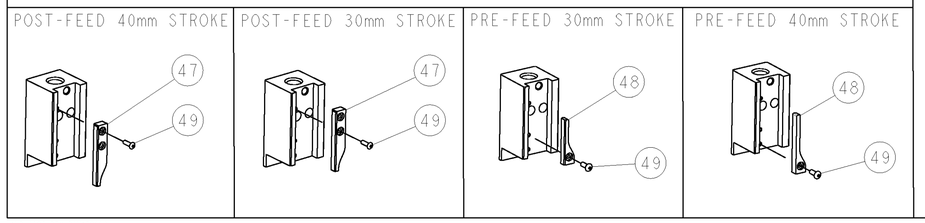

-77	-76	-72	-71	-6	-2	-1	PART NO	DESCRIPTION	ITEM NO
-	-	-	-	-	-	-	-	-	84
-	-	-	-	-	-	-	-	-	83
-	-	-	-	-	-	-	-	-	82
-	-	-	-	-	-	-	-	-	81
-	-	-	-	-	-	-	-	-	80
-	-	-	-	-	-	-	-	-	79
-	-	-	-	-	-	-	-	-	78
-	1	1	1	1	1	1	22278-9	SPRING, COMPRESSION	77
-	-	-	-	-	-	-	-	-	76
-	-	-	-	-	-	-	-	-	75
-	1	1	1	1	1	1	854769-5	HOLDER, INS	74
-77	-76	-72	-71	-6	-2	-1	PART NO	DESCRIPTION	ITEM NO

-77	-76	-72	-71	-6	-2	-1	PART NO	DESCRIPTION	ITEM NO
-	1	1	1	1	1	1	1490525-3	DEPRESSOR, WIRE	73
-	-	-	-	-	-	-	-	-	72
-	1	1	1	1	1	1	1338705-3	DOCUMENTATION PACKAGE	71
-	3	3	3	3	3	3	1-23147-4	SPRING, COMPRESSION	70
-	1	1	1	1	1	1	1490524-1	DEPRESSOR, SPACER	69
-	-	-	-	-	-	-	-	-	68
-	1	1	1	1	1	1	461264-5	PLATE, IDENTIFICATION	67
-	2	2	2	2	2	2	21017-2	SCREW, DRIVE	66
-	1	1	1	1	1	1	1424350-1	HOLDER, PIN, WIRED	65
-	-	-	-	-	-	-	-	-	64
-	1	1	1	1	1	1	3-18031-0	SCR, SET, CUP POINT M6 X 6.0	63
-	-	-	-	-	-	-	-	-	62
-	2	2	2	2	2	2	2-18032-5	SCR, SET, FLT POINT M5 X 20.0	61
-	1	1	1	1	1	1	18024-7	SCR, BTN SKT HD CAP (M4 X 10.0)	60
-	1	1	1	1	1	1	5-18022-2	SCR, HEX HD CAP M4 X 8.0	59
-	1	1	1	1	1	1	21028-2	PIN, SLOTTED SPRING .062 X .250	58
-	-	-	-	-	-	-	-	-	57
-	1	1	1	1	1	1	1338685-1	PAWL, FEED	56
-	-	-	-	-	-	-	-	-	55
-	4	4	4	4	4	4	18024-8	SCR, BTN SKT HD CAP (M4 X 12.0)	54
-	2	2	2	2	2	2	9-18023-6	SCR, SKT HD CAP M4 X 14.0	53
-	1	1	1	1	1	1	18030-1	NUT, HEX, REG M3	52
-	1	1	1	1	1	1	811242-5	BUMPER, HOLD DOWN	51
-	1	1	1	1	1	1	690753-2	SPACER, TONKER	50
-	1	1	1	1	1	1	18024-3	SCR, BTN SKT HD CAP (M3 X 10.0)	49
-	-	1	-	-	1	-	1338675-1	CAM, UNIVERSAL PRE FEED	48
-	1	-	1	1	-	1	1338676-1	CAM, UNIVERSAL POST-FEED	47
-	1	1	1	1	1	1	1320999-3	APPLICATOR SUBASSEMBLY, HDI	46
-	1	1	1	1	1	1	690191-1	PLUG,NYLON	45
-	1	1	1	1	1	1	1338660-1	RAM	44
-	-	-	-	-	-	-	-	-	43
-	-	-	-	-	-	-	-	-	42
-	1	1	1	1	1	1	2-18024-6	SCR, BTN SKT HD CAP (M8 X 25.0)	41
-	-	-	-	-	-	-	-	-	40
-	1	1	1	1	1	1	690125-1	SHIM SUB-ASSY	39
-	1	1	1	1	1	1	469367-9	SHIM	38
-	1	1	1	1	1	1	879103-3	FINE ADJUST HEAD ASSEMBLY	37
-	-	-	-	-	-	-	-	-	36
-	-	-	-	-	-	-	-	-	35
-	1	1	1	1	1	1	1320934-6	SUPPORT, TERMINAL	34
-	2	2	2	2	2	2	1-18024-0	SCR, BTN SKT HD CAP (M4 X 20.0)	33
-	1	1	1	1	1	1	18027-2	WASHER, FLAT, REG M4	32
-	1	1	1	1	1	1	1-18023-2	SCR, SKT HD CAP M4 X 12.0	31
-	1	1	1	1	1	1	1-1320908-5	SPACER, STRIP GUIDE	30
-	1	1	1	1	1	1	1633073-1	STRIP GUIDE ASSEMBLY	29
-	1	1	1	1	1	1	2-455888-0	SPACER, CRIMPER	28
-	2	2	2	2	2	2	1-22284-0	SPRING, COMPRESSION	27
-	1	1	1	1	1	1	356835-1	LEVER, DRAG RELEASE	26
-	1	1	1	1	1	1	240792-1	DRAG, TERMINAL	25
-	1	1	1	1	1	1	1320928-1	PLATE, STRIP GUIDE	24
-	1	1	1	1	1	1	980371-4	SCR, SKT HD SHLDR 5.0 DIA X 6.0	23
-	1	-	1	1	-	1	690472-2	STRIPPER	22
-	1	1	1	1	1	1	1-18023-1	SCR, SKT HD CAP M4 X 10.0	21
-	4	4	4	4	4	4	18025-2	WASHER, SPRG LOCK, REG M4	20
-	-	1	-	-	1	-	1-690472-7	STRIPPER	19
-	-	-	-	-	-	-	-	-	18
-	1	-	-	1	-	-	1338684-1	SHEAR HOLDER, FRONT	17
-	-	-	-	-	-	-	-	-	16
-	-	-	-	-	-	-	-	-	15
-	-	-	-	-	-	-	-	-	14
-	-	-	-	-	-	-	-	-	13
-	1	1	1	1	1	1	3-22280-3	SPRING, COMPRESSION	12
-	1	1	1	1	1	1	356885-4	STOP, SHEAR	11
-	-	1	1	-	1	1	1320921-1	SHEAR HOLDER, FRONT, CUT	10
-	1	1	1	1	1	1	462006-1	FLOATING SHEAR, FRONT	9
1	2	2	2	1	1	1	5-1633138-0	ANVIL, COMBINATION	8
-	1	1	1	1	1	1	1-240641-1	SPACER	7
-	-	-	-	-	-	-	-	-	6
-	1	1	1	1	1	1	854772-1	DEPRESSOR, SHEAR	5
-	1	1	1	1	1	1	1-238011-0	BLOCK, CRIMPER SPACER	4
1	2	2	2	1	1	1	9-1583690-9	CRIMPER, INSUL O	3
-	1	1	1	1	1	1	455888-1	SPACER, CRIMPER	2
1	2	2	2	1	1	1	8-1673600-1	CRIMPER, WIRE	1
-77	-76	-72	-71	-6	-2	-1	PART NO	DESCRIPTION	ITEM NO

THIS DRAWING IS A CONFIDENTIAL DOCUMENT OF TYCO ELECTRONICS CORPORATION IT IS "SUBJECT" TO CHANGE AND THE CONTROLLING DEPARTMENT OR ORGANIZATION SHOULD BE CONTACTED FOR THE LATEST REVISION.

DIMENSIONS: mm [IN]
TOLERANCES UNLESS OTHERWISE SPECIFIED: 0 PLC ±, 1 PLC ±, 2 PLC ±, 3 PLC ±, 4 PLC ±, ANGLES ±
MATERIAL - -
FINISH - -

DWN D PROUSE 28JUN2007
CHK -
APVD MICHAEL FORD 28JUN2007
PRODUCT SPEC -
APPLICATION SPEC See Table
WEIGHT -

Tyco Electronics
Tyco Electronics
Harrisburg, PA 17105-3608
NAME FINE ADJUST SIDE FEED HDI APPLICATOR
SIZE A CAGE CODE DRAWING NO 458637-3
SCALE 3:5 SHEET 1 OF 1 REV A1
RESTRICTED TO -
CUSTOMER DRAWING

SUPERSEDED
NOT the LATEST REVISION

AMP 4805 REV 31MAR2000
Pro/ENGINEER DRAWING