THIS DRAWING IS UNPUBLISHED. RELEASED FOR PUBLICATION - 2000
VERTRAULICH - UNVEROEFFENTLICHTE ZEICHNUNG FREI ZUR VEROEFFENTLICHUNG
© COPYRIGHT 2000 BY TYCO ELECTRONICS CORPORATION. ALL RIGHTS RESERVED. ALLE RECHTE VORBEHALTEN.

MATED WITH PASSEND ZU:

PROJECT NO.: EGAUT99403

LOC	DIST
A1	-

PROJEKT NR.: -

REVISIONS
ABEANDERUNGEN

P	LTR	DESCRIPTION BESCHREIBUNG	DATE	DWN	APVD
	A	SEE PCN EG00-2756-00	01DEC2000	A.Ri	H.Sch
	B	SEE PCN EG00-0268-02	28JAN2002	A.Ri	HSCH
	C	SEE PCN EG00-1134-02	04APR2002	A.Ri	HSCH

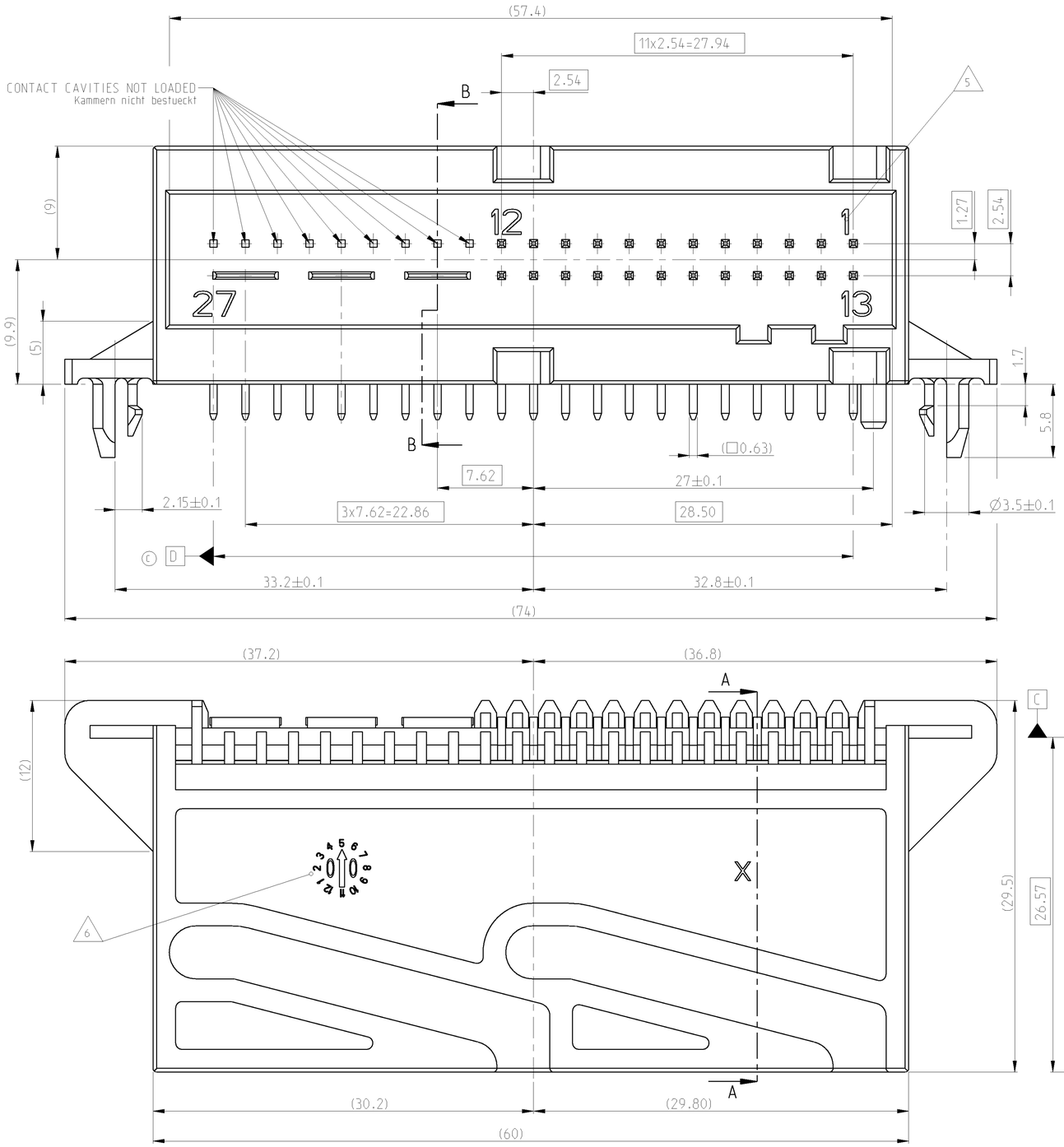

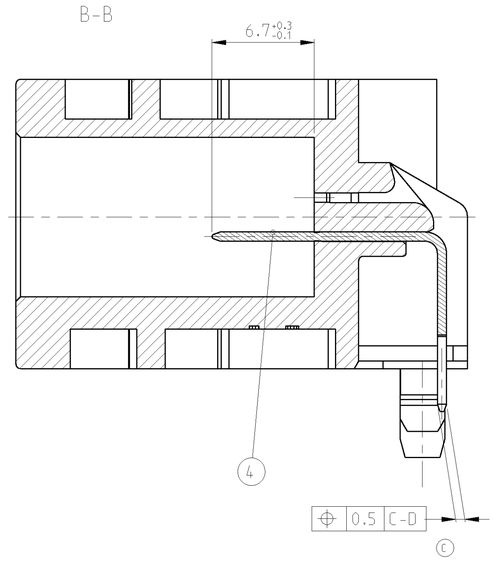

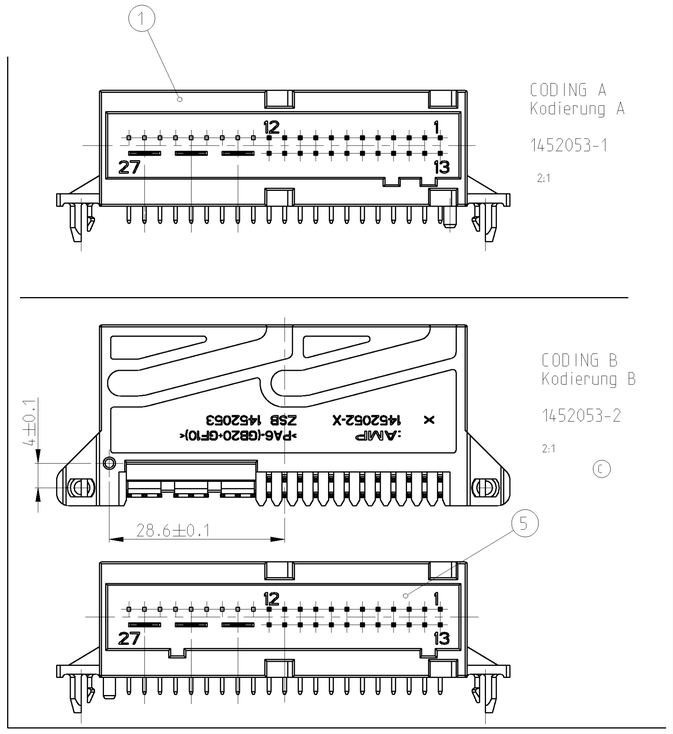

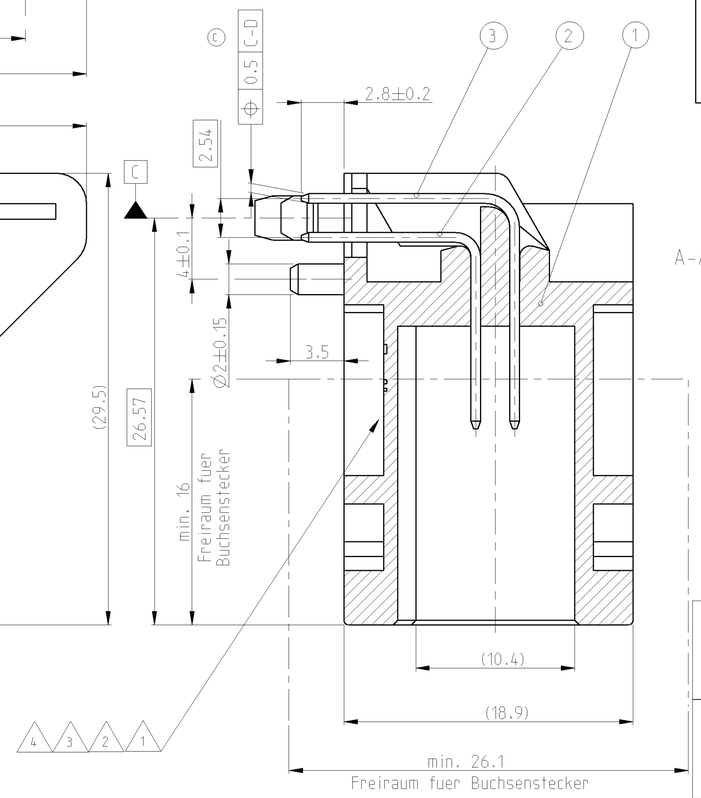

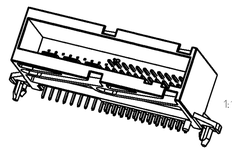

NOTES
BEMERKUNGEN

1. AMP-LOGO
2. ORDER NUMBER
   BESTELL-NUMMER
3. REVISION NUMBER
   WERKZEUGAENDERUNGSINDEX
4. MATRIAL MARKING
   WERKSTOFFKENNZEICHNUNG
5. CAVITY MARKING
   KAMMERNUMMERIERUNG
6. PRODUCTION DATE
   PRODUKTIONSDATUM

ORDER NO. Bestell-Nr.	REV.	DESCRIPTION Beschreibung	QTY. Stck.	MATERIAL	SURFACE COLOR	ITEM NO.
1452053-2	C	TAB 5.2x0.6 ©	3	CuSn0.15	TIN PLATED	4
		AMP MODU II PIN Lang	12	CuSn6	TIN PLATED	3
		AMP MODU II PIN kurz	12	CuSn6	TIN PLATED	2
		PIN HEADER 3+24POS., 90°, COD B ©	1	PA6-(GB20+GF10)	BLUE	5
1452053-1	C	TAB 5.2x0.6 ©	3	CuSn0.15	TIN PLATED	4
		AMP MODU II PIN Lang	12	CuSn6	TIN PLATED	3
		AMP MODU II PIN kurz	12	CuSn6	TIN PLATED	2
		PIN HEADER 3+24POS., 90°, COD A	1	PA6-(GB20+GF10)	BLACK	1

GEGENSTECKER COUNTERPARTS		
0-1355543-2	1	COVER WITH SLIDE, 180° CABLEOUTLET, CODING B
0-1355543-1	1	COVER WITH SLIDE, 180° CABLEOUTLET, CODING A
0-1241728-2	1	MQS-RECEPTACLE HOUSING, 24+3POS., CODING B
0-1241728-1	1	MQS-RECEPTACLE HOUSING, 24+3POS., CODING A
AMP BESTELL-NR. AMP ORDER NO.	STK. QTY.	BENENNUNG DESCRIPTION

THIS DRAWING IS A CONTROLLED DOCUMENT FOR TYCO ELECTRONICS CORPORATION. IT IS SUBJECT TO CHANGE AND THE CONTROLLING ENGINEERING ORGANIZATION THROUGH ITS CONNECTED PCN OR LATEST REVISION.
DIESES DOKUMENTDIENT ALS REG DURCH AMP INCORPORATED CONTROLLIERT. ES UNTERLIEGT DER ENTWICKLUNGSABTEILUNG DURCH DIE PCN OD. NEUESTE REVISION.

DIMENSIONS: MASSEINHEITEN: mm

TOLERANCES UNLESS OTHERWISE SPECIFIED: ALLGEMEINTOLERANZEN
0 PLC ±-
1 PLC ±0.3
2 PLC ±-
3 PLC ±-
4 PLC ±-
ANGLES/WINKEL ±4°

MATERIAL - -
FINISH/OBERFLAECHE/FARBE - -

DWN A.Richter	01DEC2000	tyco Electronics — tyco Electronics AMP GmbH, D - 64625 Bensheim
CHK H.Schmitt	06DEC2000	
APVD -		NAME 3xTAB 5.2/ 24x MODU II PIN HEADER 90 DEG.; ASS'Y 3x Flachstecker 5.2/ 24x MODU II Stiftwanne 90 Grad, kompl.
PRODUCT SPEC PRODUKTSPEZ. -		-
APPLICATION SPEC VERARBEITUNGSSPEZ. -		SIZE A1 · CAGE CODE 00779 · DRAWING NO ZEICHNUNGS-NR. C- 1452053 · RESTRICTED TO NUR FUER -
WEIGHT GEWICHT -		
CUSTOMER DRAWING	/KUNDENZEICHNUNG	SCALE MASSSTAB 2:1 · SHEET BLATT 1 OF VON 1 · REV C

AMP 4805 REV 31MAR2000

Pro/ENGINEER DRAWING