THIS DRAWING IS UNPUBLISHED. RELEASED FOR PUBLICATION 20
© COPYRIGHT 20 BY TYCO ELECTRONICS CORPORATION. ALL RIGHTS RESERVED.

PART NUMBER	REV	TERMINATOR	FEED TYPE	DESCRIPTION
1426592-1	A	LEADMAKER	MECH POST FEED	CUTS CARRIER
1426592-2	A	BENCH	MECH PRE FEED	CUTS CARRIER
1426592-6	A	LEADMAKER	MECH POST FEED	CONTINUOUS CARRIER
7-1426592-1	A	LEADMAKER	MECH POST FEED	-1 AND SPARE PARTS
7-1426592-2	A	BENCH	MECH PRE FEED	-2 AND SPARE PARTS
7-1426592-6	A	LEADMAKER	MECH POST FEED	-6 AND SPARE PARTS
7-1426592-7	A	-	-	SPARE PARTS KIT

SET UP GAGE 458637-3

LOC	DIST
A	66

REVISIONS

P	LTR	DESCRIPTION	DATE	DWN	APVD
	A	SEE ECO-06-006490	20MAR2006	DP	MC

CRIMP DATA FCI TERMINAL TYCO CRIMP SPECS 6

TERMINAL NAME: APEX MALE 2.8mm TERMINAL

CRIMP	SIZE	TYPE	RANGE
WIRE	2.29 [.090 IN]	F	0.50mm²-1.00mm² 7
INSUL	3.30 [.130 IN]	F	1.50-2.13 [.059-.084 IN]

WIRE STRIP LENGTH 4.70-5.50 [.185-.216 IN]

APPL INSTRUCTIONS 408-8322

TERMINAL - -
APPL SPEC - -

FEED 15.24 [.600 IN]

TERMINALS APPLIED

TYCO PN	MANUF'S PN	-	-
1572912-1	54001818	-	-
1572912-2	54001801	-	-
1572912-3	54001804	-	-
1572912-4	54001819	-	-

WIRE SIZE	CRIMP HEIGHT	PIN PN & LENGTH [IN]
1.00mm²	1.52 ±0.05 [.060 ±.002 IN]	354779-4 [.3010]
0.75mm²	1.47 ±0.05 [.058 ±.002 IN]	354779-8 [.3030]
0.50mm²	1.40 ±0.05 [.055 ±.002 IN]	1-354779-4 [.3060]
-	-	-
-	-	-
-	-	-
-	-	-
-	-	-
-	-	-
-	-	-
-	-	-
-	-	-

1. RECOMMENDED SPARE PARTS.
2. GREASE RAM, CAM, CAM FOLLOWER AND FEED ROD LIGHTLY.
3. CERTAIN TERMINALS REQUIRE LUBRICATION. REFER TO THE APPLICATOR INSTRUCTION SHEET FOR MORE INFORMATION.
4. LUBRICATE DAILY PER THE APPLICATOR INSTRUCTION SHEET SUPPLIED WITH THE APPLICATOR.
5. ITEM 53 CUT TO LENGTH AT ASSEMBLY.
6. ALL CRIMP DATA CALCULATED BY TYCO ELECTRONICS.
7. WIRE RANGE STATED ARE THOSE OF ORIGINAL CUSTOMER. TERMINAL RANGE IS 20 - 18 AWG.

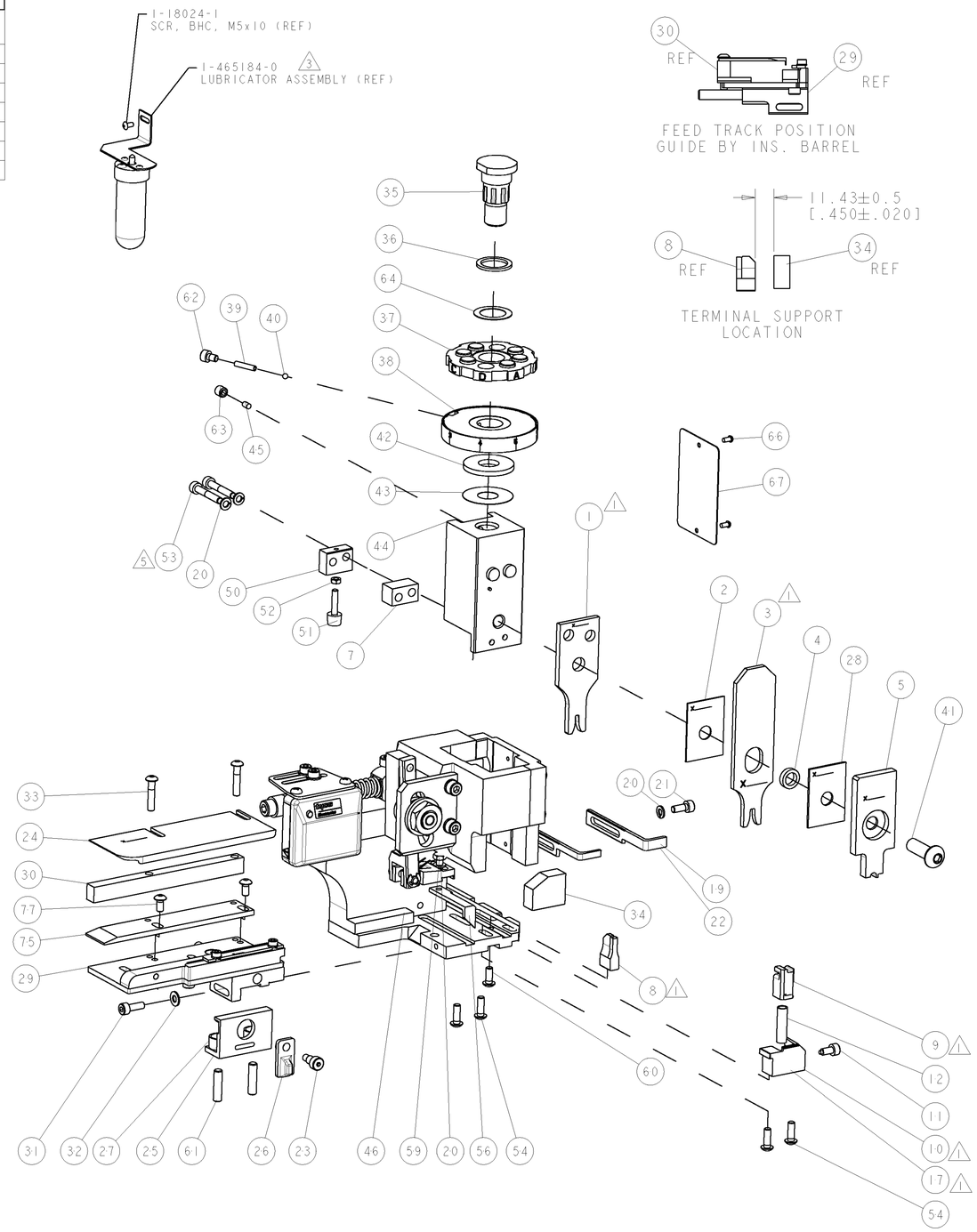

ITEM NO	DESCRIPTION	PART NO	-77	-76	-72	-71	-6	-2	-1
73	-	-	-	-	-	-	-	-	-
72	-	-	-	-	-	-	-	-	-
71	DOCUMENTATION PACKAGE	1338705-1	-	1	1	1	1	1	1
70	-	-	-	-	-	-	-	-	-
69	-	-	-	-	-	-	-	-	-
68	-	-	-	-	-	-	-	-	-
67	PLATE, IDENTIFICATION	461264-1	-	1	1	1	1	1	1
66	SCREW, DRIVE	21017-2	-	2	2	2	2	2	2
65	-	-	-	-	-	-	-	-	-
64	WASHER, FLAT PRECISION	986950-1	-	1	1	1	1	1	1
63	SCR, SET, CUP POINT M6 X 6.0	3-18031-0	-	1	1	1	1	1	1
62	SCR, SKT HD CAP M4 X 6.0	18023-9	-	1	1	1	1	1	1
61	SCR, SET, FLT POINT M5 X 20.0	2-18032-5	-	2	2	2	2	2	2
60	SCR, BTN SKT HD CAP (M4 X 10.0)	18024-7	-	1	1	1	1	1	1
59	SCR, HEX HD CAP M4 X 8.0	5-18022-2	-	1	1	1	1	1	1
58	-	-	-	-	-	-	-	-	-
57	-	-	-	-	-	-	-	-	-
56	PAWL, FEED	1338685-1	-	1	1	1	1	1	1
55	-	-	-	-	-	-	-	-	-
54	SCR, BTN SKT HD CAP (M4 X 12.0)	18024-8	-	4	4	4	4	4	4
53	SCR, SKT HD CAP M4 X 25.0	1-18023-5	-	2	2	2	2	2	2
52	NUT, HEX, REG M3	18030-1	-	1	1	1	1	1	1
51	BUMPER, HOLD DOWN	811242-5	-	1	1	1	1	1	1
50	SPACER, TONKER	690753-2	-	1	1	1	1	1	1
49	SCR, BTN SKT HD CAP (M3 X 10.0)	18024-3	-	1	1	1	1	1	1
48	CAM, UNIVERSAL PRE FEED	1338675-1	-	-	1	-	-	1	-
47	CAM, UNIVERSAL POST-FEED	1338676-1	-	1	-	1	1	-	1
46	APPLICATOR SUBASSEMBLY, HDI	1320999-3	-	1	1	1	1	1	1
45	PLUG,NYLON	690191-1	-	1	1	1	1	1	1
44	RAM	1338660-1	-	1	1	1	1	1	1
43	SHIM SUB-ASSY	690125-1	-	1	1	1	1	1	1
42	WASHER, RAM (.115)	690124-1	-	1	1	1	1	1	1
41	SCR, BTN SKT HD CAP (M8 X 25.0)	2-18024-6	-	1	1	1	1	1	1
40	BALL, STEEL	23241-1	-	1	1	1	1	1	1
39	SPRING, COMPRESSION	2-22278-7	-	1	1	1	1	1	1
38	DISC, ADJUST, INSULATION CRIMP	1320922-1	-	1	1	1	1	1	1
37	WIRE DISC, ASSEMBLY	354777-1	-	1	1	1	1	1	1
36	SPRING, COMPRESSION	22480-5	-	1	1	1	1	1	1
35	POST, RAM	690212-1	-	1	1	1	1	1	1
34	SUPPORT, TERMINAL	1320934-2	-	1	1	1	1	1	1
33	SCR, BTN SKT HD CAP (M4 X 20.0)	1-18024-0	-	2	2	2	2	2	2
32	WASHER, FLAT, REG M4	18027-2	-	1	1	1	1	1	1
31	SCR, SKT HD CAP M4 X 12.0	1-18023-2	-	1	1	1	1	1	1
30	SPACER, STRIP GUIDE	1-1320908-6	-	1	1	1	1	1	1
29	STRIP GUIDE ASSEMBLY	1633073-1	-	1	1	1	1	1	1
28	SPACER, CRIMPER	1-455888-0	-	1	1	1	1	1	1
27	SPRING, COMPRESSION	1-22284-0	-	2	2	2	2	2	2
26	LEVER, DRAG RELEASE	356835-1	-	1	1	1	1	1	1
25	DRAG, TERMINAL	240792-1	-	1	1	1	1	1	1
24	PLATE, STRIP GUIDE	1320928-3	-	1	1	1	1	1	1
23	SCR, SKT HD SHLDR 5.0 DIA X 6.0	980371-4	-	1	1	1	1	1	1
22	STRIPPER	690472-2	-	1	-	1	1	-	1
21	SCR, SKT HD CAP M4 X 10.0	1-18023-1	-	1	1	1	1	1	1
20	WASHER, SPRG LOCK, REG M4	18025-2	-	4	4	4	4	4	4
19	STRIPPER	690472-1	-	-	1	-	-	1	-
18	-	-	-	-	-	-	-	-	-
17	SHEAR HOLDER, FRONT	1338684-1	-	1	-	-	1	-	-
16	-	-	-	-	-	-	-	-	-
15	-	-	-	-	-	-	-	-	-
14	-	-	-	-	-	-	-	-	-
13	-	-	-	-	-	-	-	-	-
12	SPRING, COMPRESSION	3-22280-3	-	1	1	1	1	1	1
11	STOP, SHEAR	356885-4	-	1	1	1	1	1	1
10	SHEAR HOLDER, FRONT, CUT	1320921-1	-	-	1	-	1	1	1
9	FLOATING SHEAR, FRONT	1-454276-9	-	1	1	1	1	1	1
8	ANVIL, COMBINATION .090	1633132-4	1	2	2	2	1	1	1
7	SPACER	8-240641-3	-	1	1	1	1	1	1
6	-	-	-	-	-	-	-	-	-
5	DEPRESSOR, SHEAR	1-455889-4	-	1	1	1	1	1	1
4	BLOCK, CRIMPER SPACER	238011-2	-	1	1	1	1	1	1
3	CRIMPER, INSULATION F PREMIUM	6-456134-4	1	2	2	2	1	1	1
2	SPACER, CRIMPER	455888-6	-	1	1	1	1	1	1
1	CRIMPER, WIRE PREMIUM	1-456406-5	1	2	2	2	1	1	1

ITEM NO	DESCRIPTION	PART NO	-77	-76	-72	-71	-6	-2	-1
85	-	-	-	-	-	-	-	-	-
84	-	-	-	-	-	-	-	-	-
83	-	-	-	-	-	-	-	-	-
82	-	-	-	-	-	-	-	-	-
81	-	-	-	-	-	-	-	-	-
80	-	-	-	-	-	-	-	-	-
79	-	-	-	-	-	-	-	-	-
78	-	-	-	-	-	-	-	-	-
77	SCR, BTN SKT HD CAP (M4 X 8.0)	18024-6	-	2	2	2	2	2	2
76	-	-	-	-	-	-	-	-	-
75	EXTENSION PLATE STRIP GUIDE ASSEMBLY	525891-1	-	1	1	1	1	1	1
74	-	-	-	-	-	-	-	-	-

VIEW B ROTATED 180°

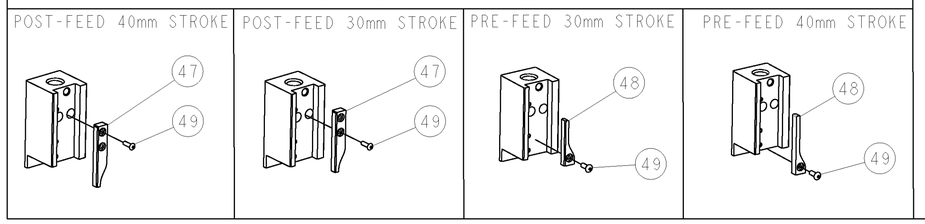

THIS DRAWING IS A CONTROLLED DOCUMENT FOR TYCO ELECTRONICS CORPORATION. IT IS SUBJECT TO CHANGE AND THE CONTROLLING ENGINEERING ORGANIZATION SHOULD BE CONTACTED FOR THE LATEST REVISION.

DIMENSIONS: mm [IN]

TOLERANCES UNLESS OTHERWISE SPECIFIED:
0 PLC ±-
1 PLC ±-
2 PLC ±-
3 PLC ±-
4 PLC ±-
ANGLES ±-

MATERIAL - -
FINISH - -

DWN 03JAN2006 D.PROUSE
CHK
APVD 03JAN2006 M.CLIFFORD
PRODUCT SPEC -
APPLICATION SPEC See Table
WEIGHT -
CUSTOMER DRAWING

tyco Electronics
Tyco Electronics
Harrisburg, PA 17105-3608

SIDE FEED HDI APPLICATOR

SIZE A CAGE CODE 00779 DRAWING NO 1-1426592-2
SCALE 3:5 SHEET 1 OF 1 REV A

OBSOLETE
NOT the LATEST
REVISION